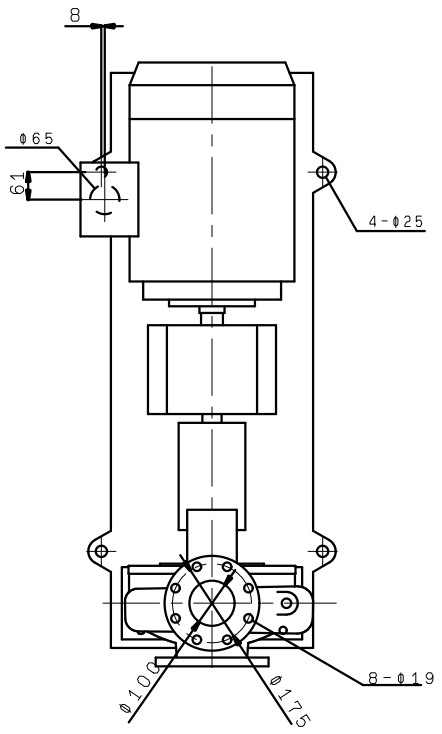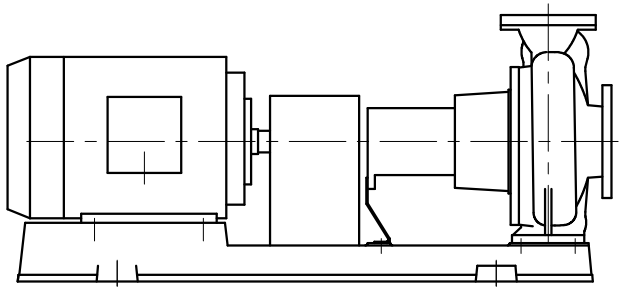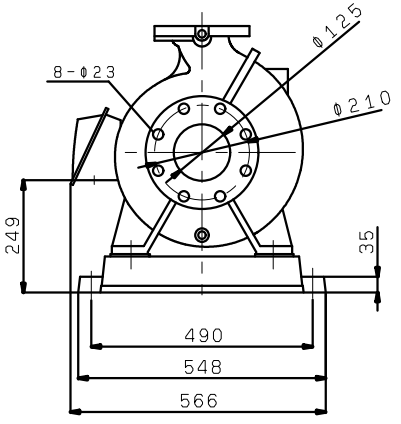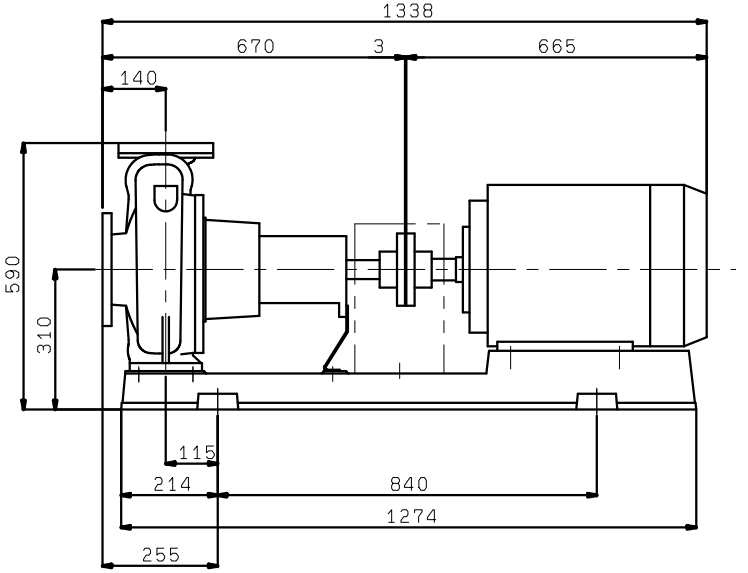GDL1256M4ME18