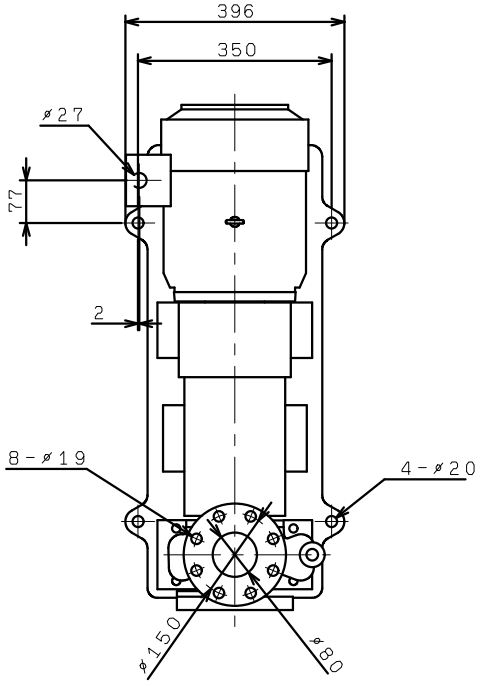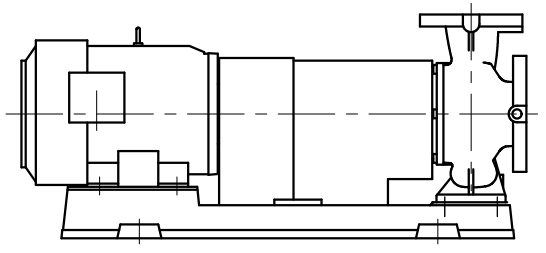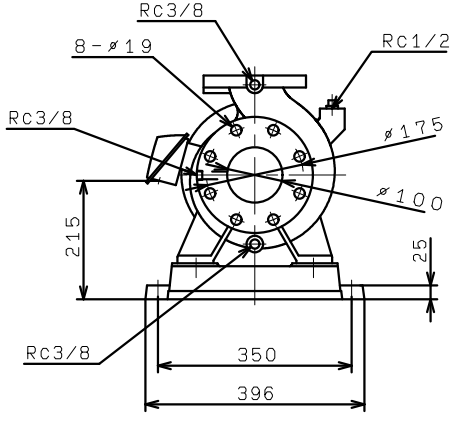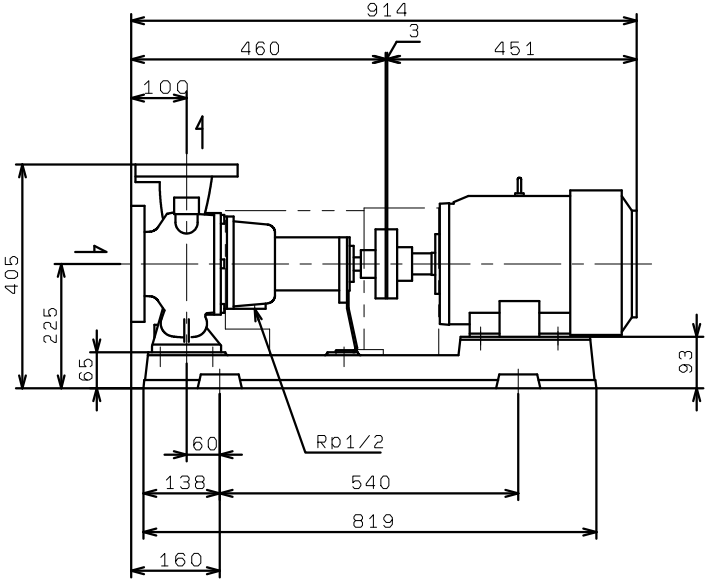GEI1005G2ME7.5
GEI1005M2ME7.5
(VC86)