GEJ505M2ME2.2
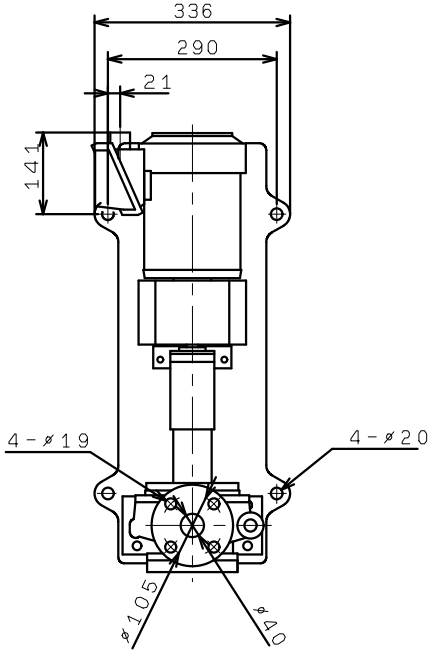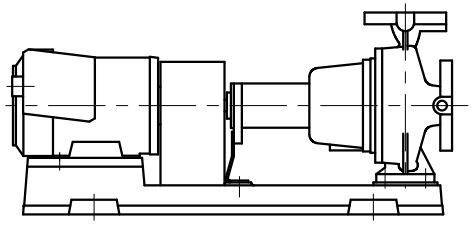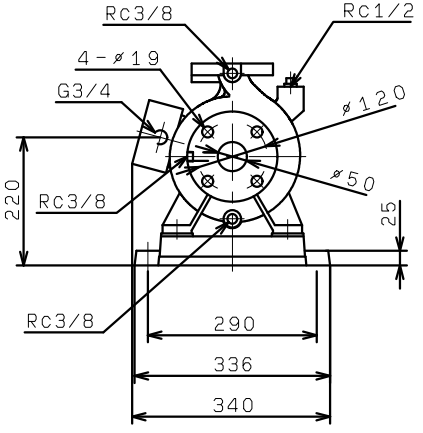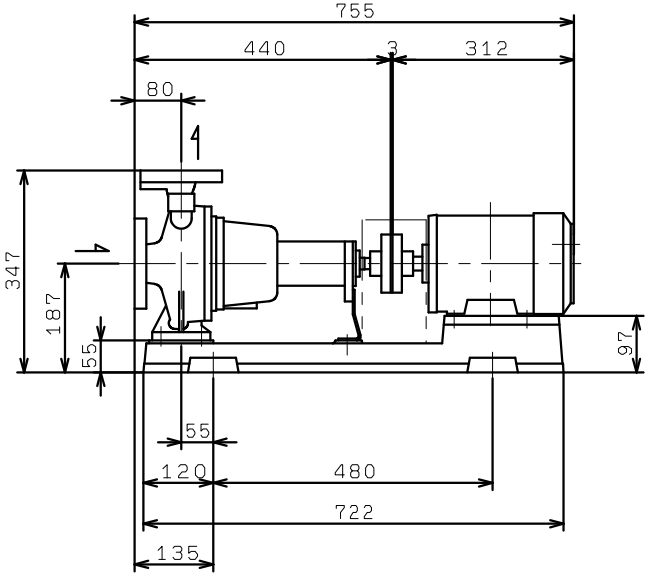
(VC30,84)