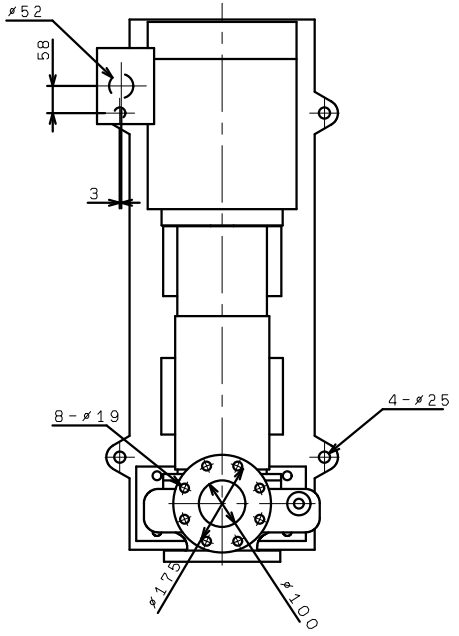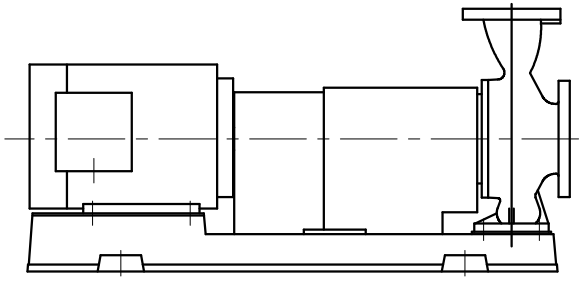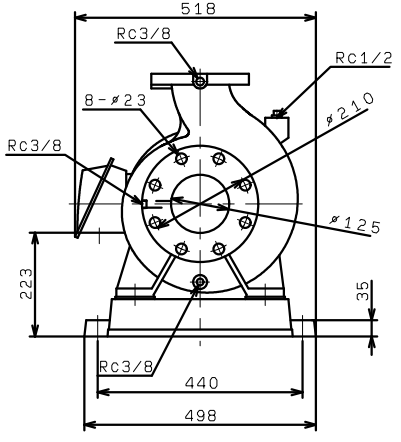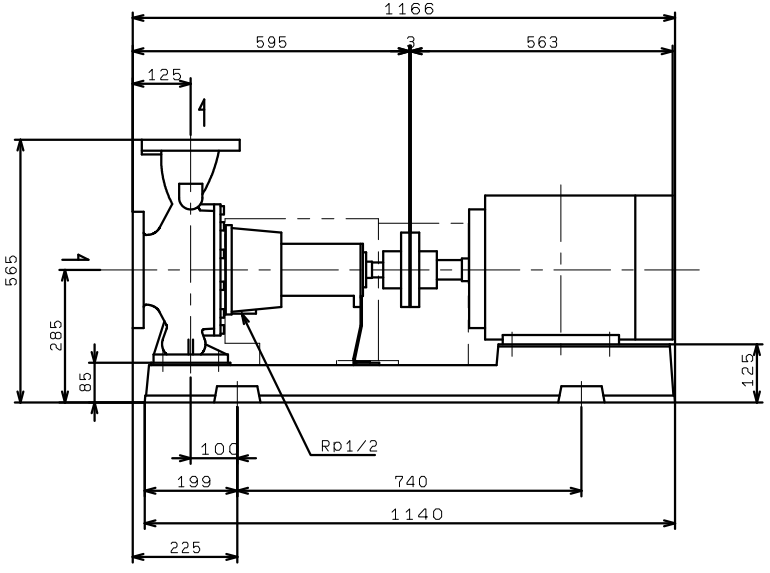GEK1256M4ME11
GEK1256G4ME11
(VC86)