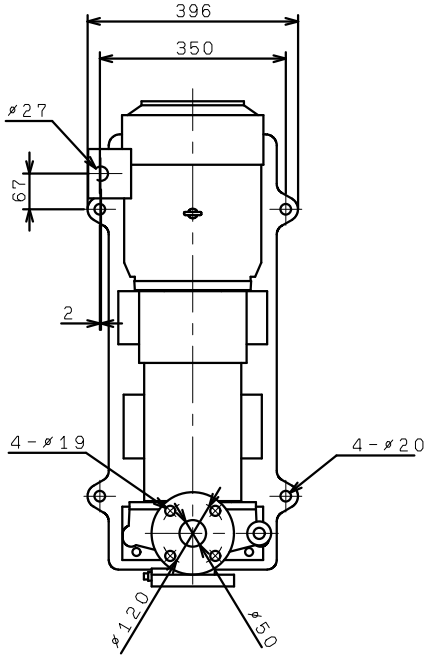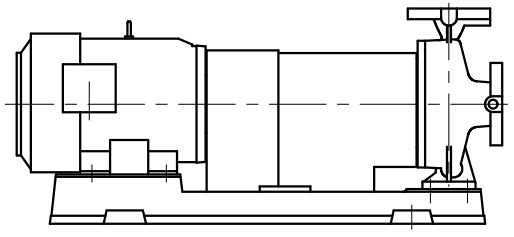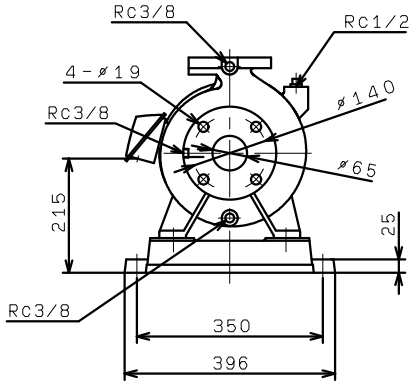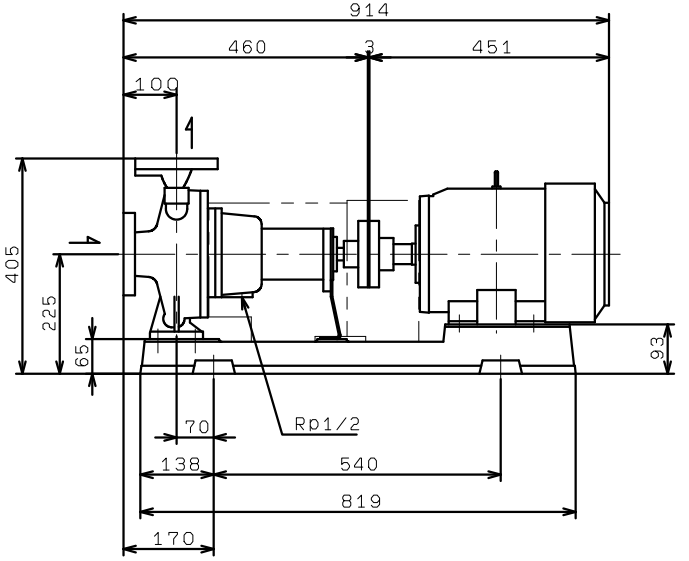GEK655G2ME5.5
GEK655G2ME7.5
GEK655M2ME5.5
GEK655M2ME7.5
(VC86)