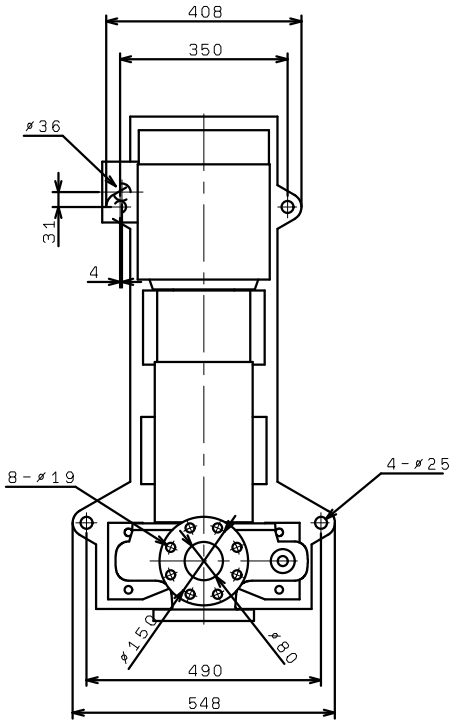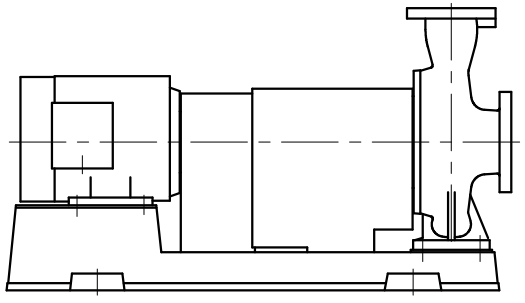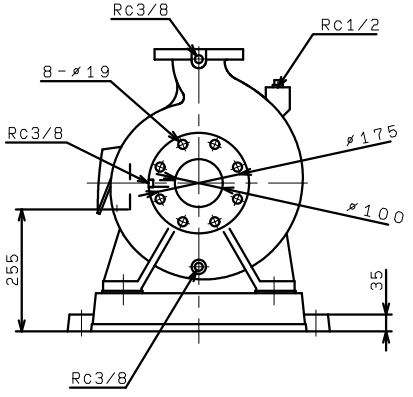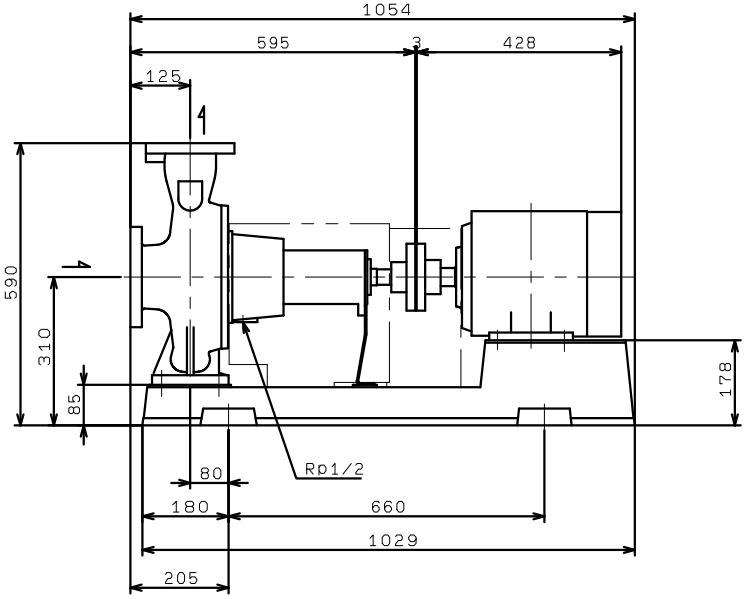GEL1005M4ME5.5
GEL1005G4ME5.5
(VC86)