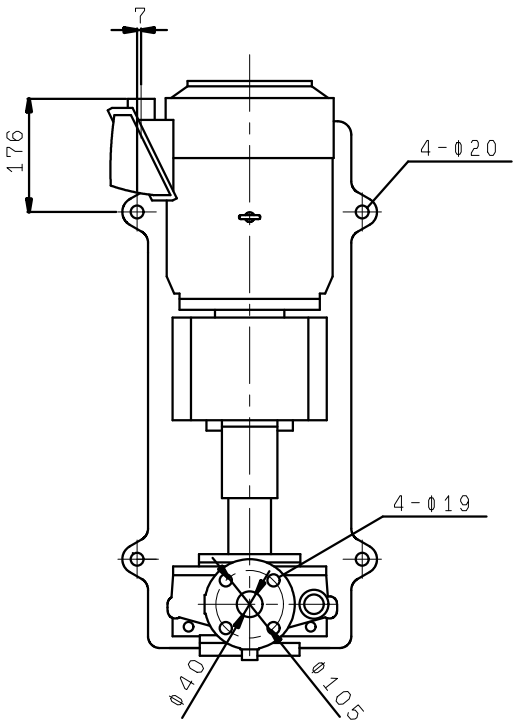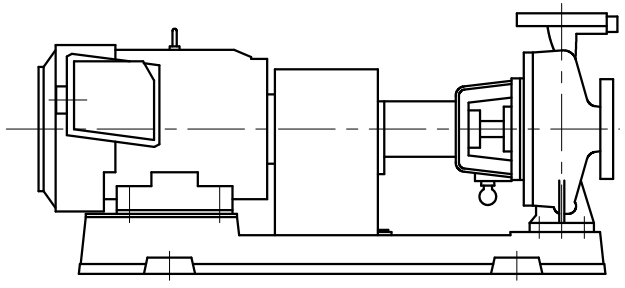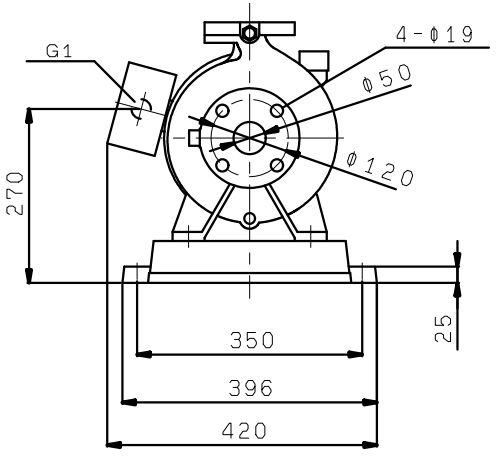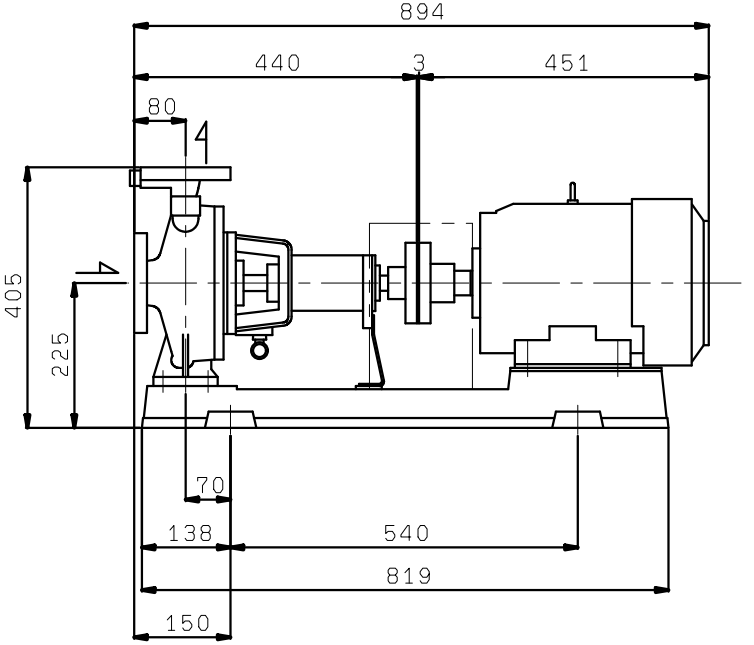GEN506M2ME5.5
(VC30)