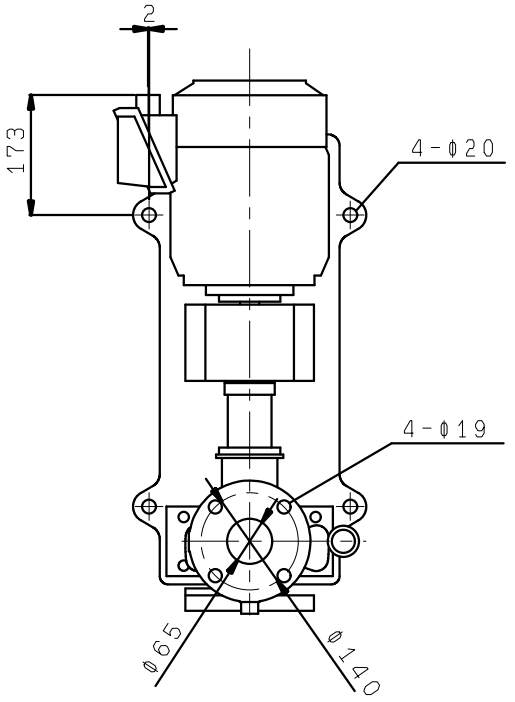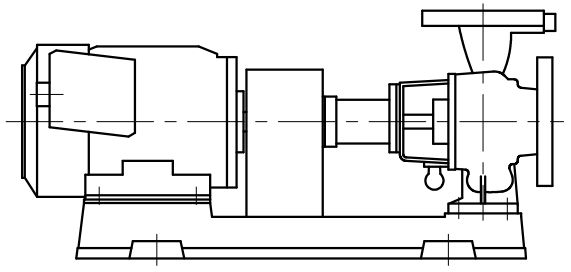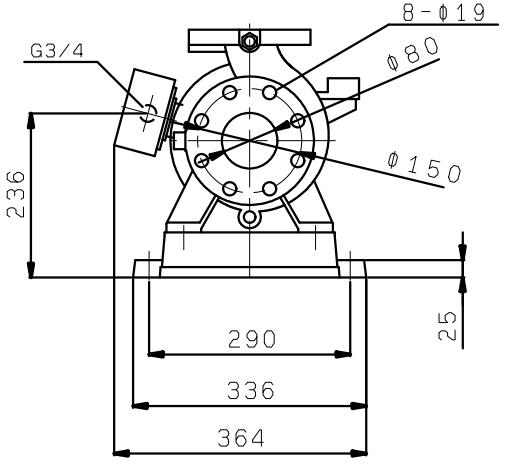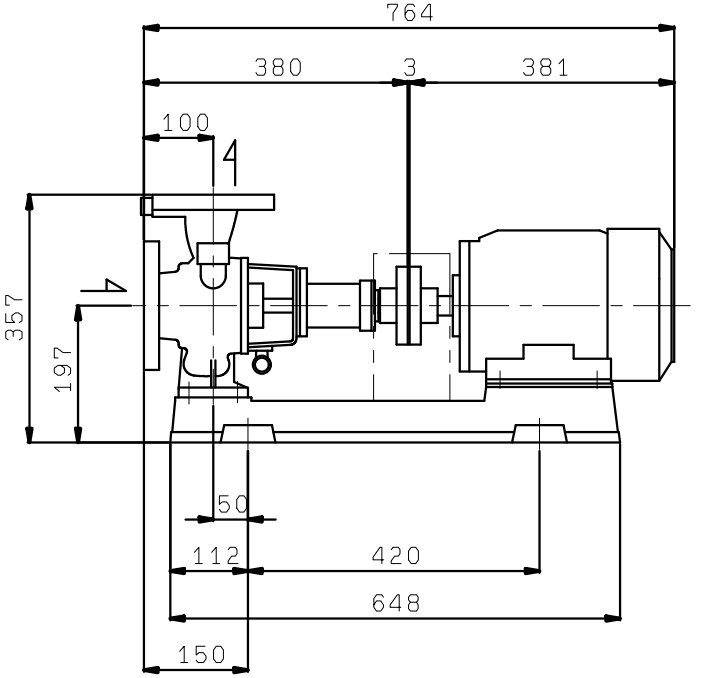GEN806M2ME3.7
(VC30)