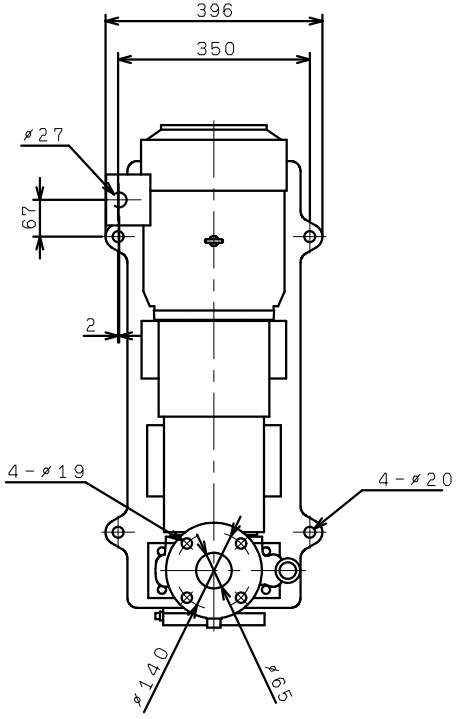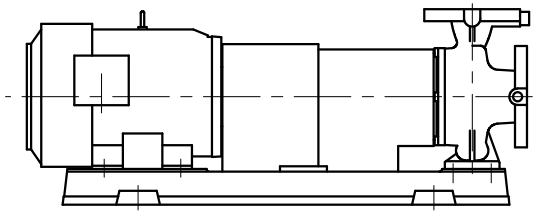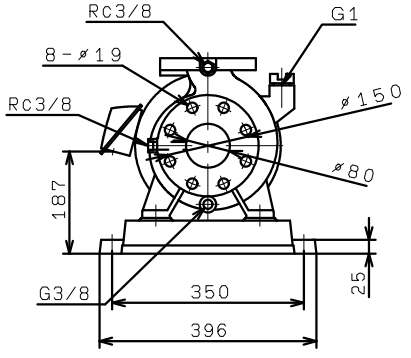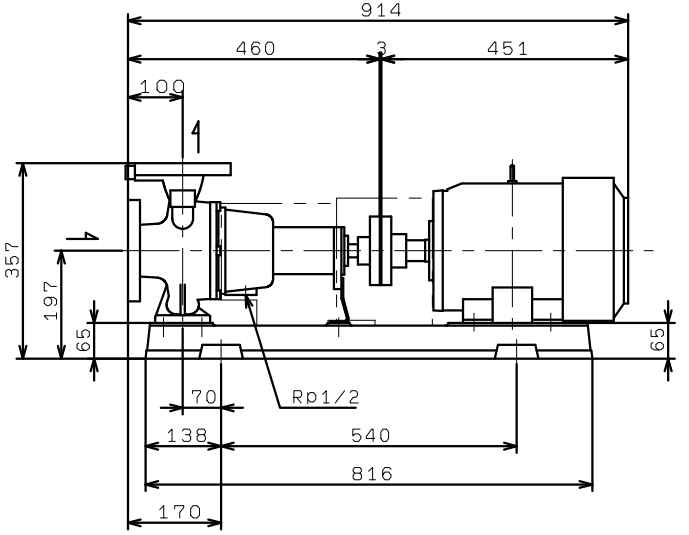GEN806M2ME5.5
GEN806M2ME7.5
(VC86)