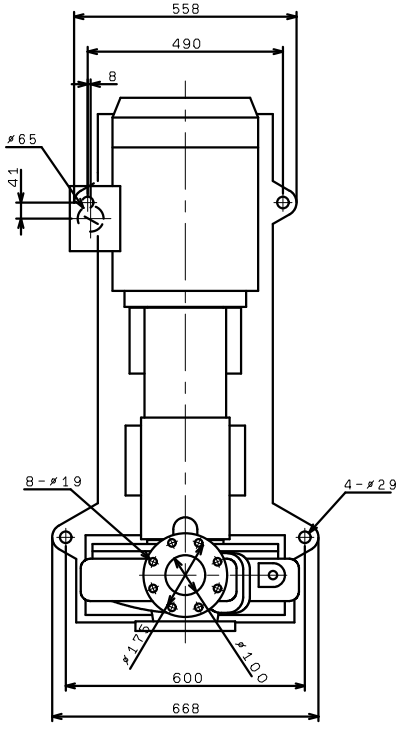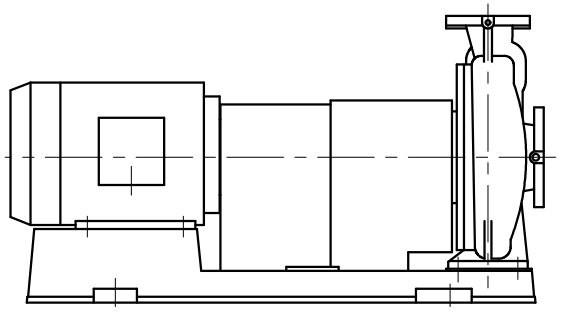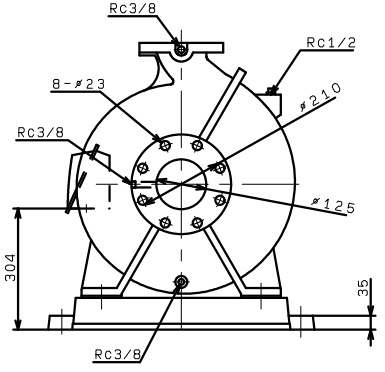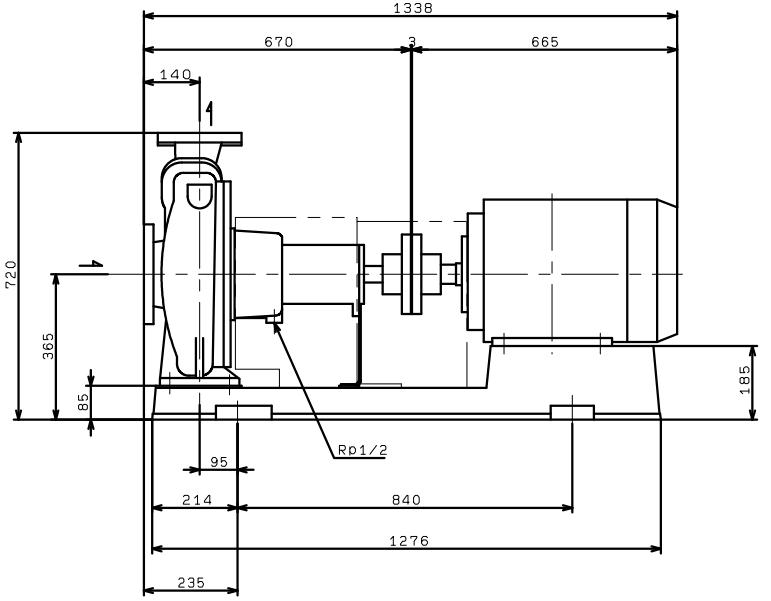GEO1255M4ME22
GEO1255G4ME22
(VC86)