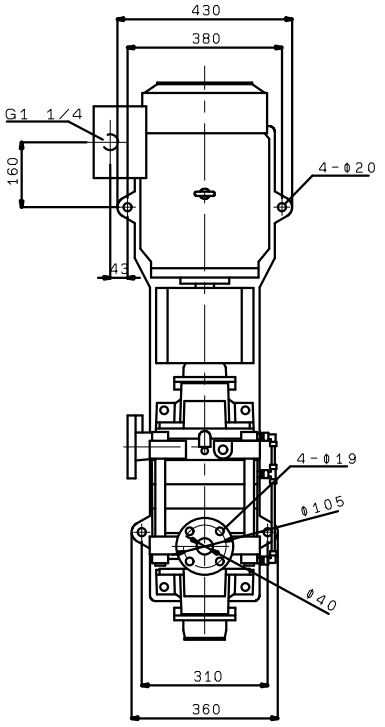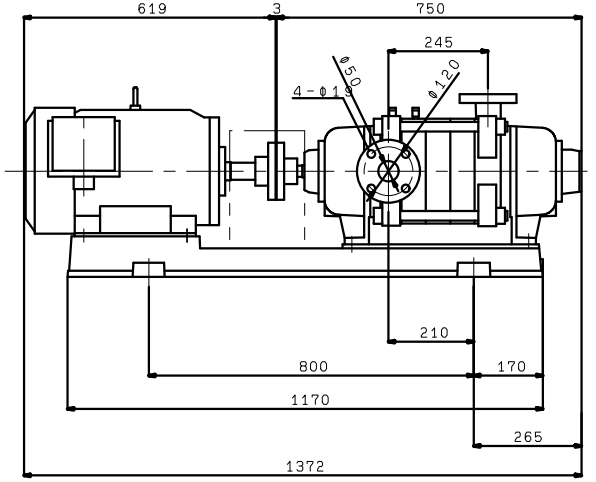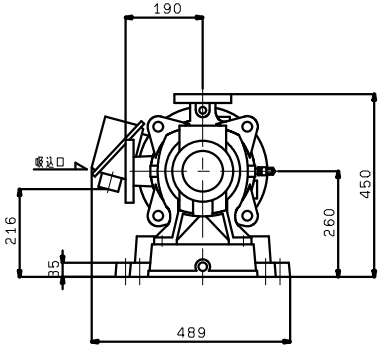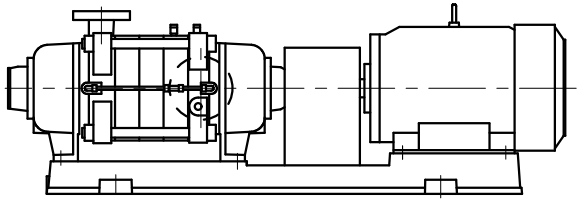K506GX4ME18 K506MX4ME18 (VC30) KR506MX4ME18