K505MX5ME11 KR505MX5ME11
K505MX5ME15 KR505MX5ME15
K506MX5ME15 KR506MX5ME15
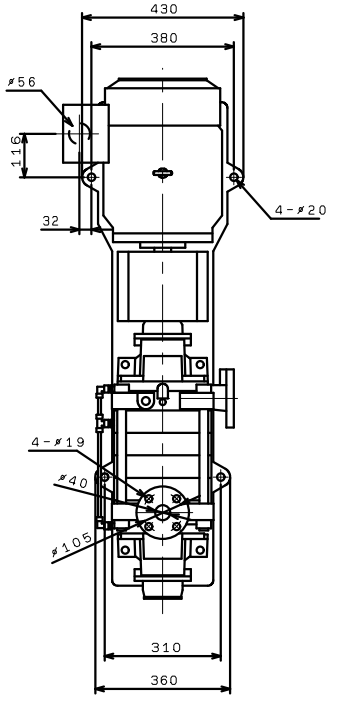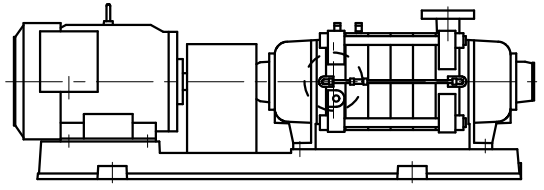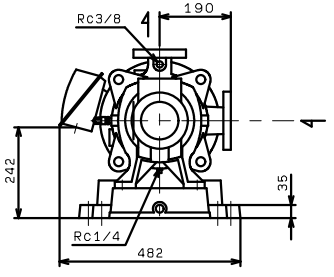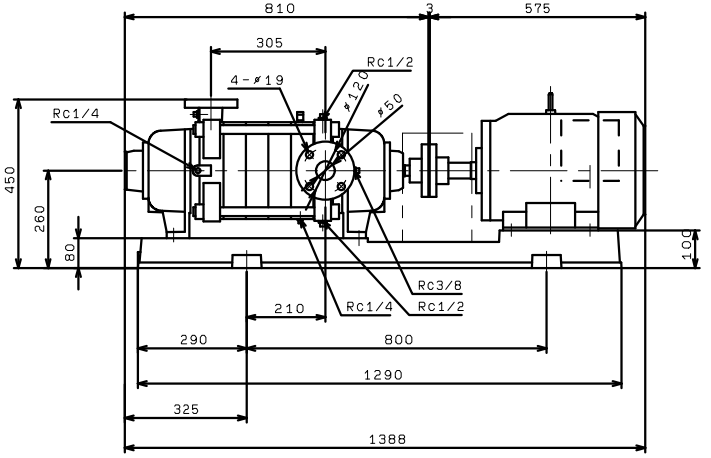
(VC91)