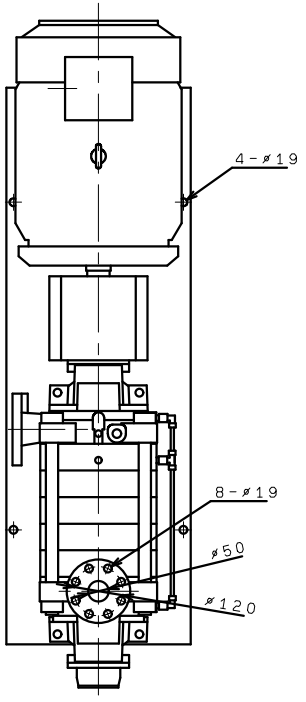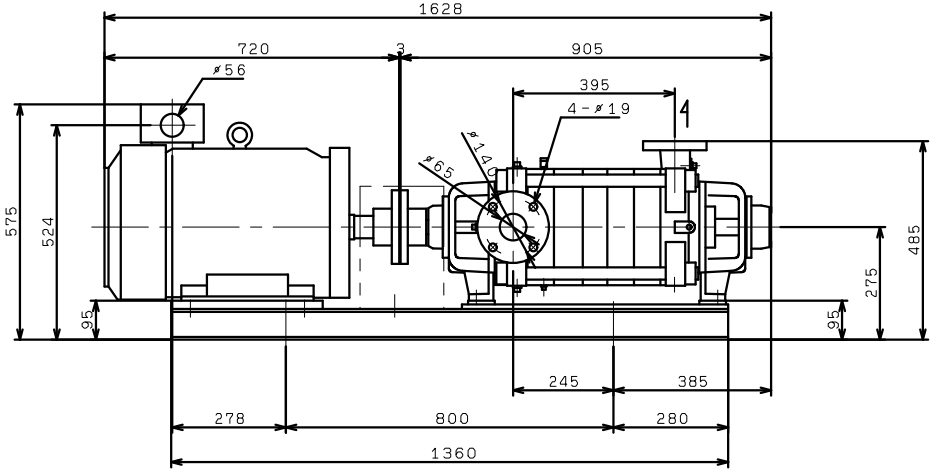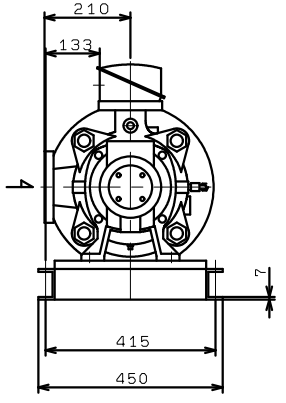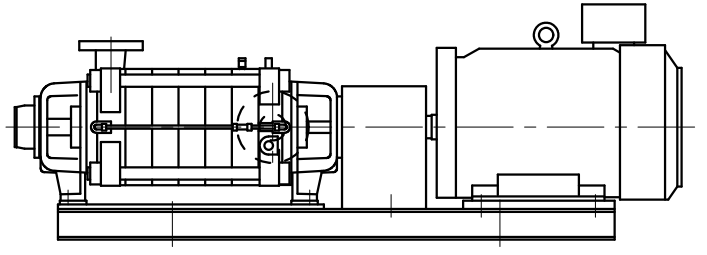K655MX6ME30 KR655MX6ME30