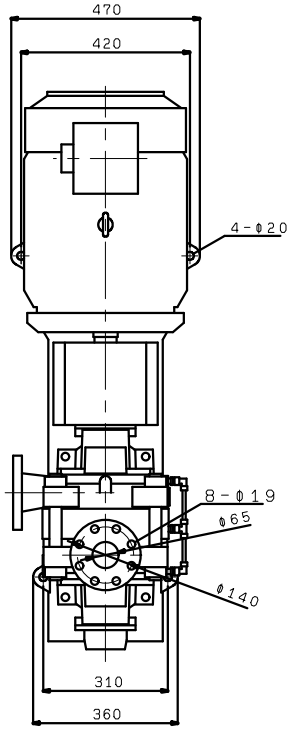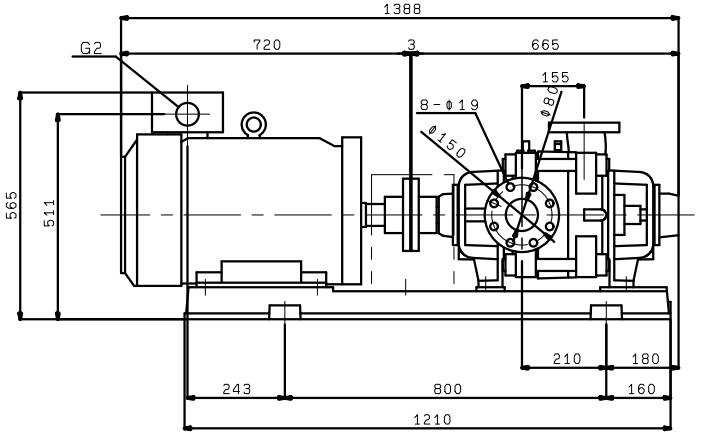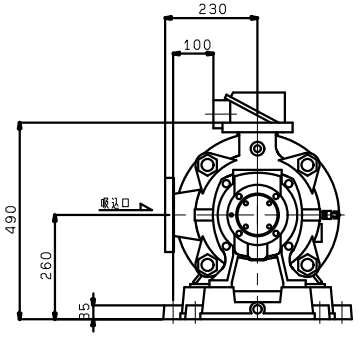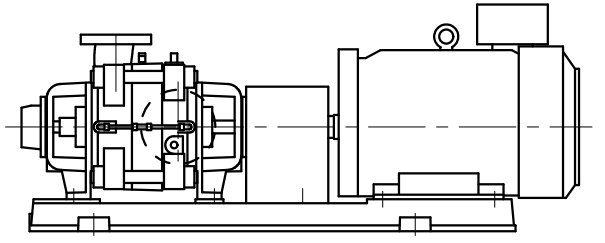K805GX2ME30 K805MX2ME30 KR805MX2ME30
K806GX2ME30 K806MX2ME30 KR806MX2ME30
(VC30)