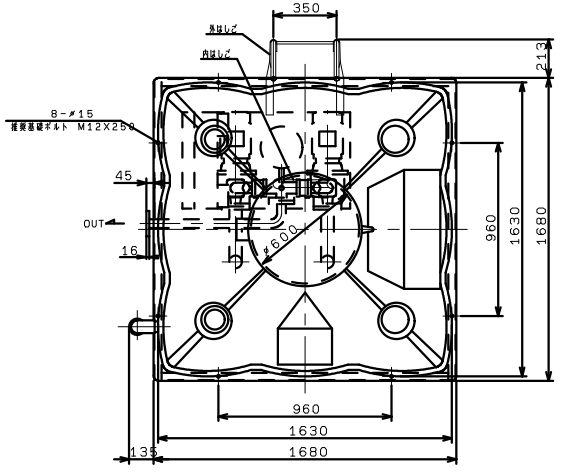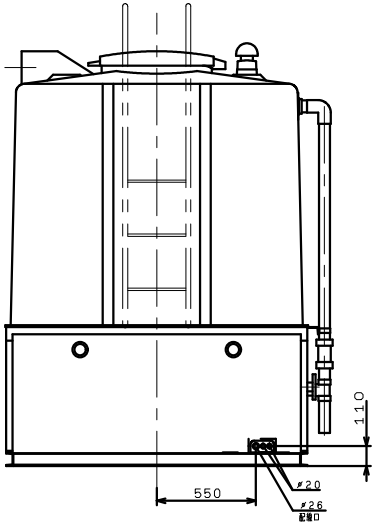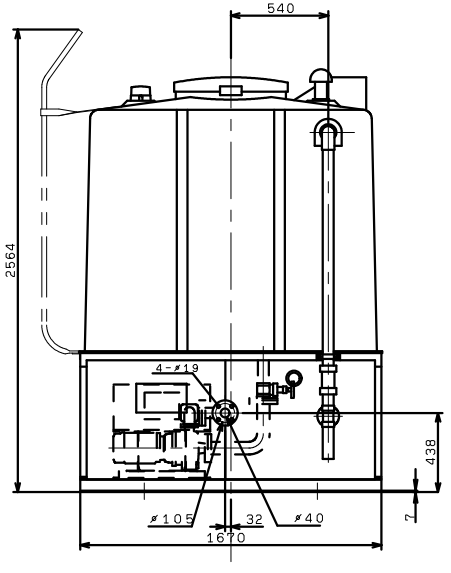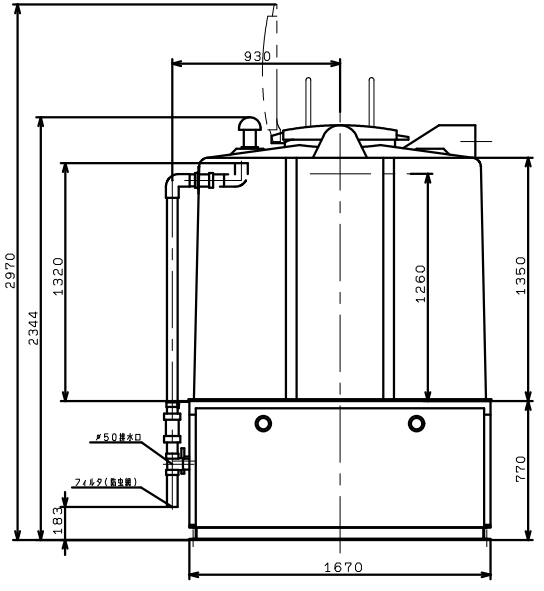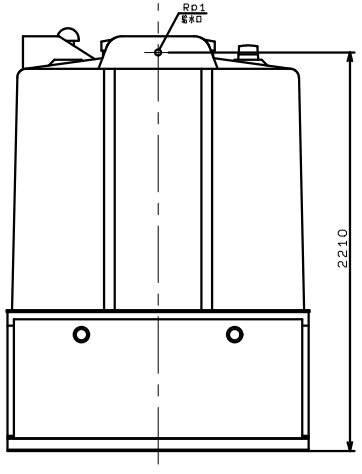KFET3-32A0.75S2
KFET3-32A0.75
KFET3-32A1.1S2
KFET3-32A1.1
KFET3-40A1.5
KFET3-40A2.2
KFET3-40A3.7
KFET3-50A2.2
KFET3-50A3.7