KTK505A3ME7.5T
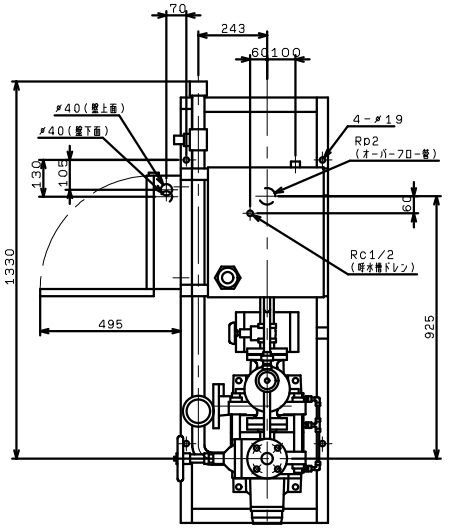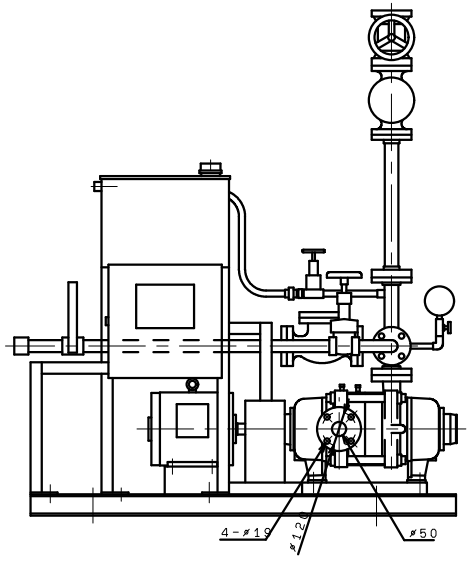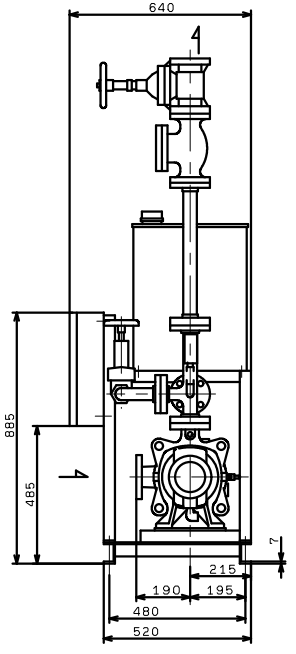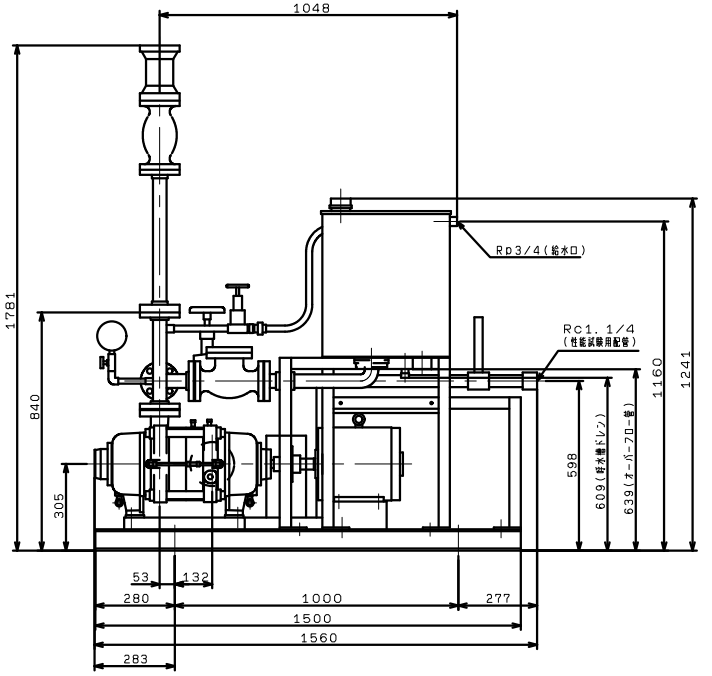
VC(83)