KTK505A3ME7.5TP
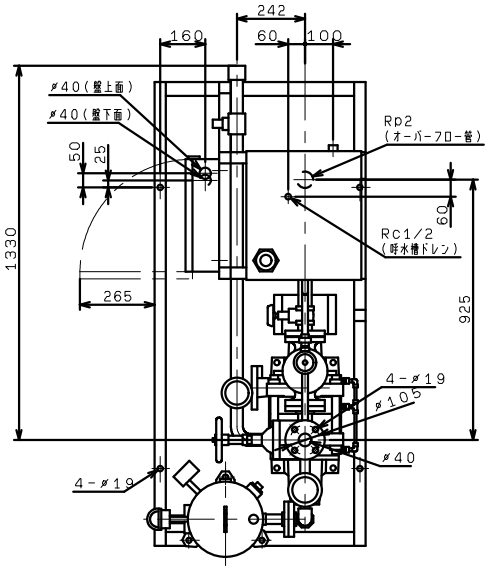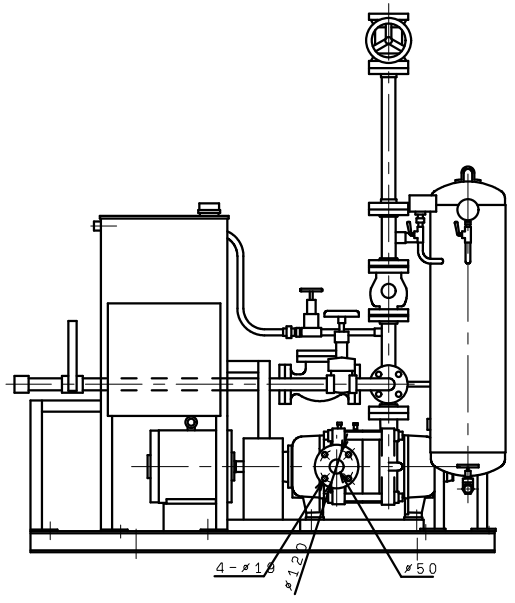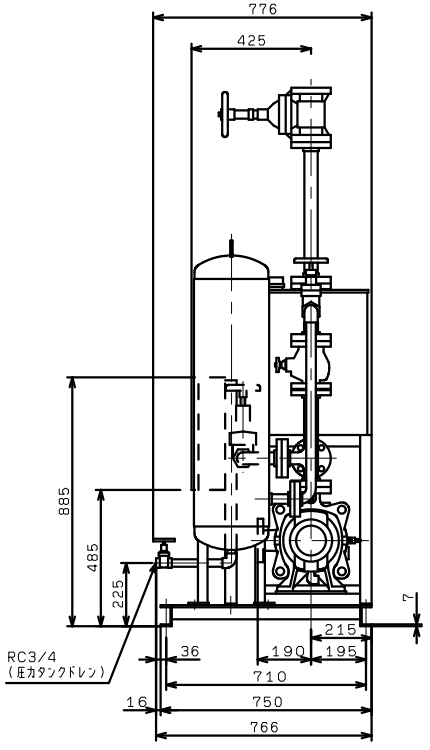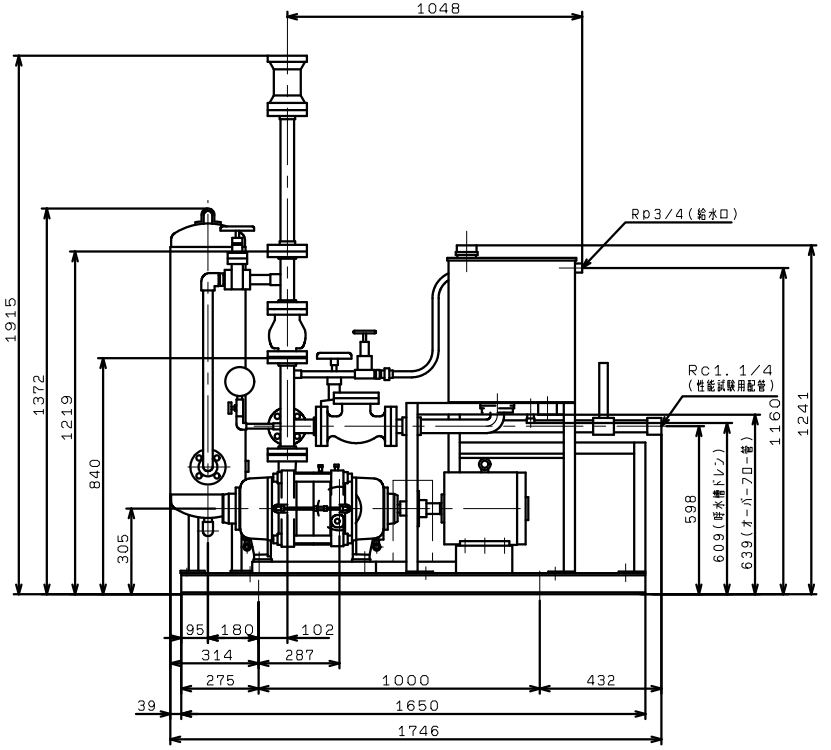
VC(83)