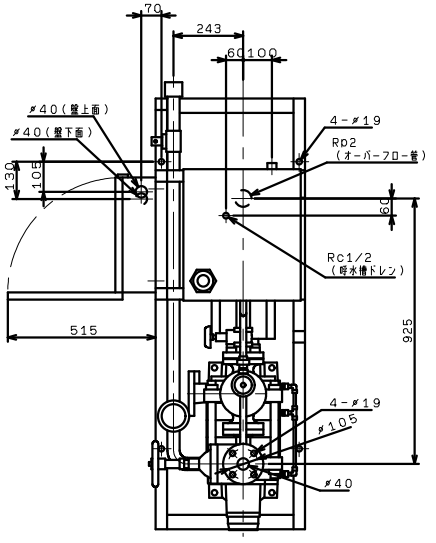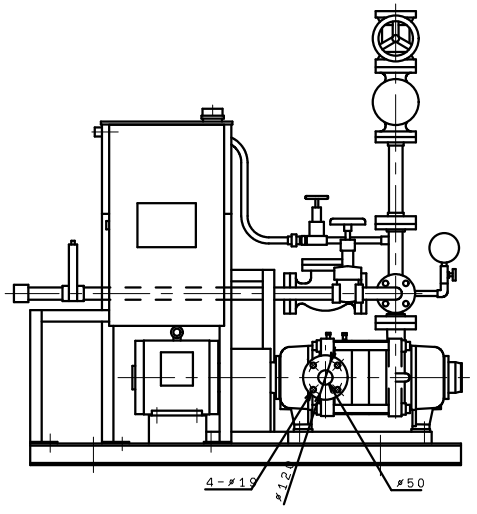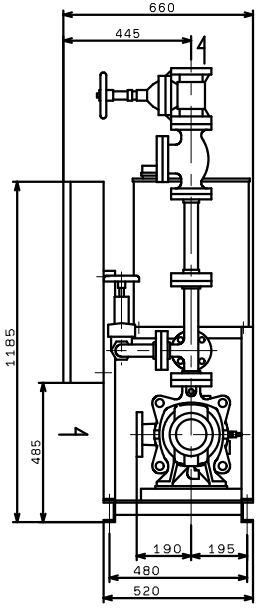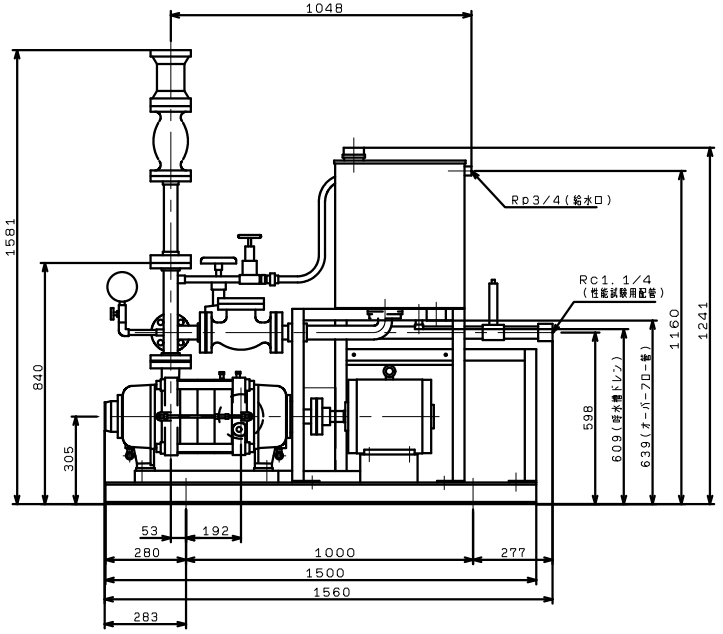KTK505A4ME7.5T
VC(41,42,44,45,74,75)