KTK505A4ME7.5TP
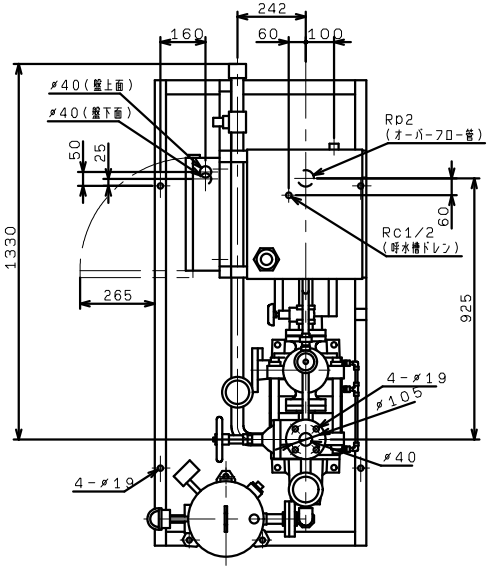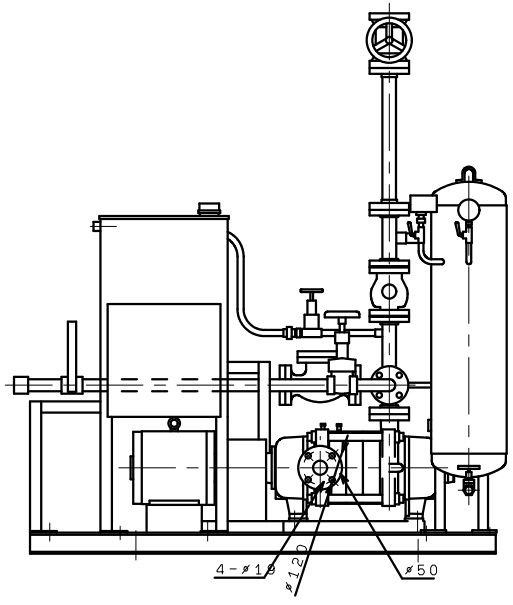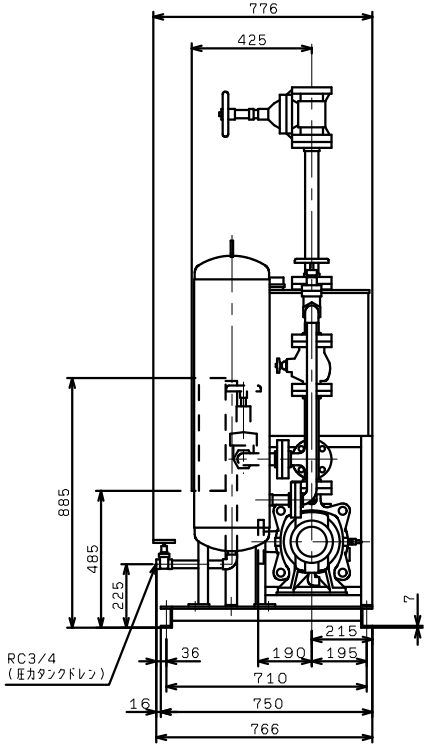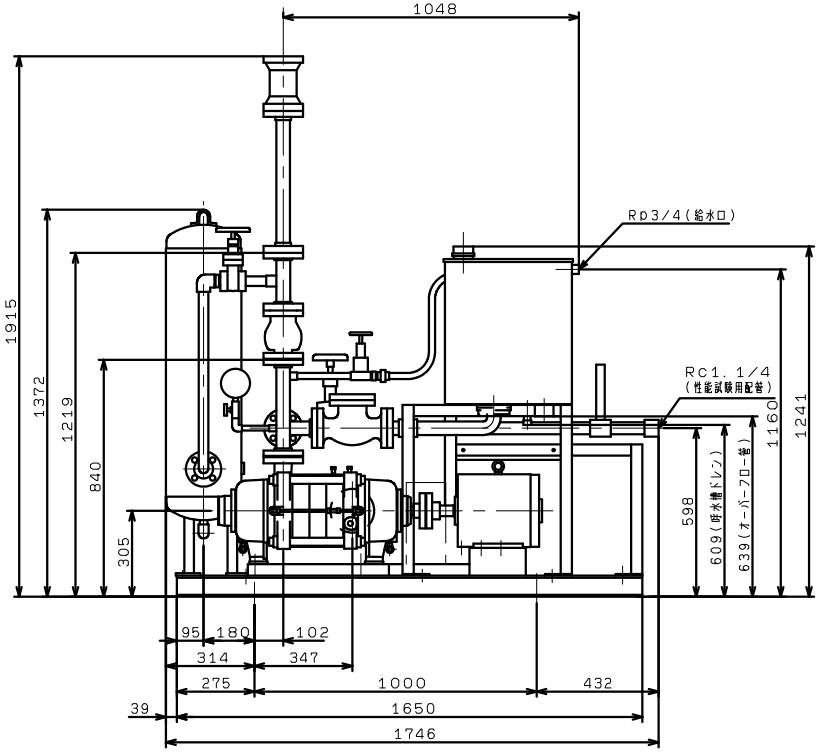
VC(B3)