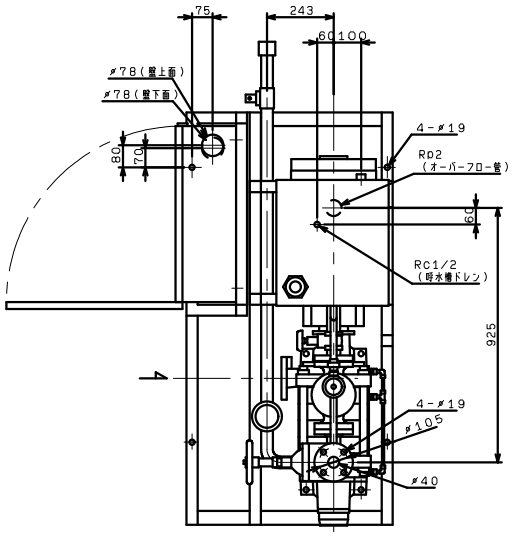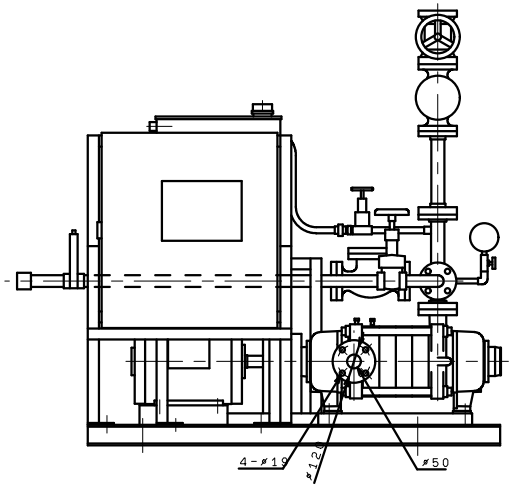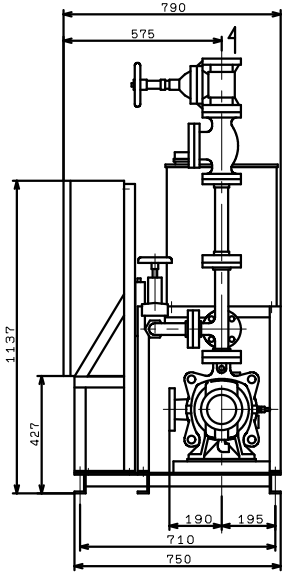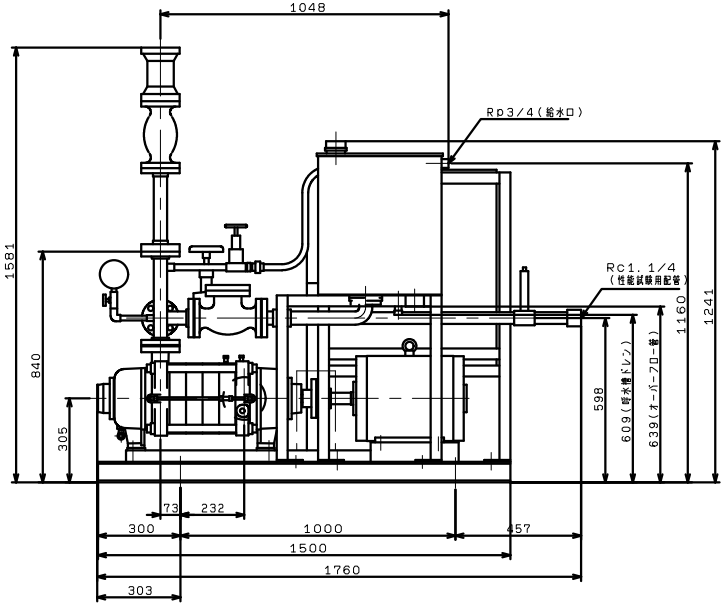KTK505A5ME15T
VC(41, 42, 43, 44, 45, 74, 75)