KTK505A5ME15T
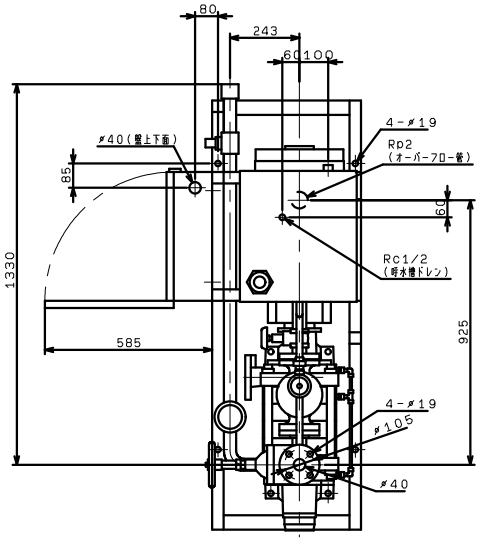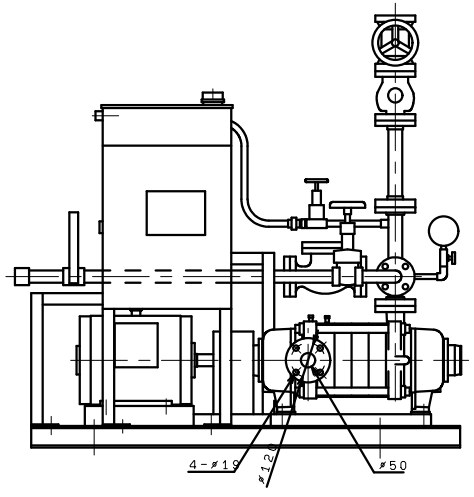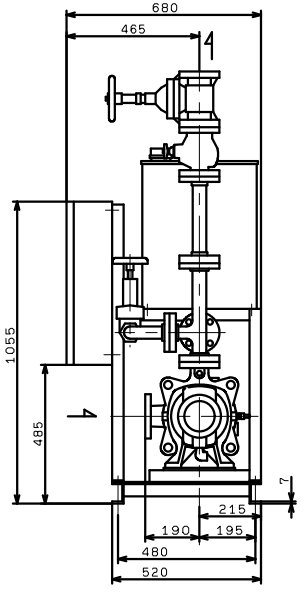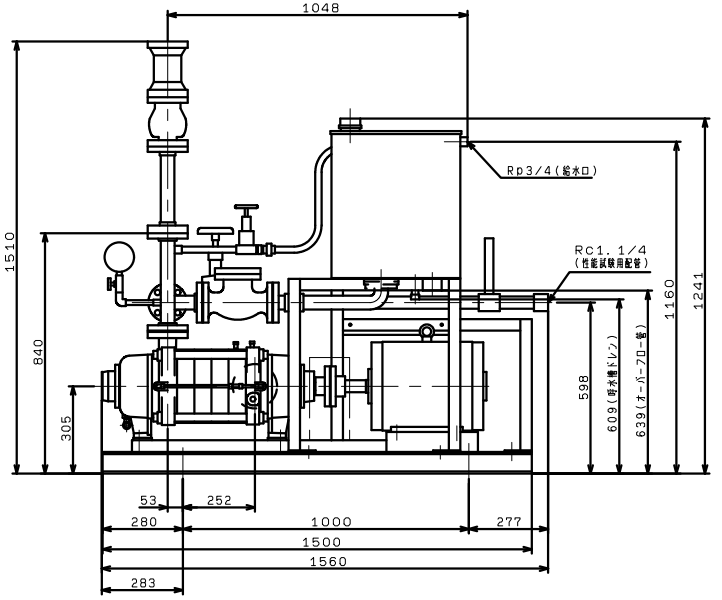
VC(90)