KTK505A5ME15TP
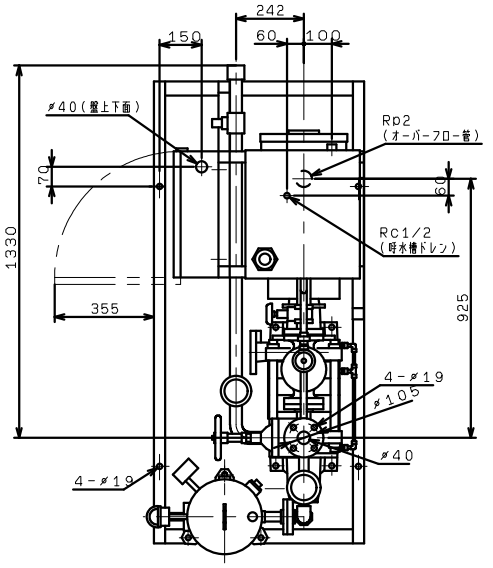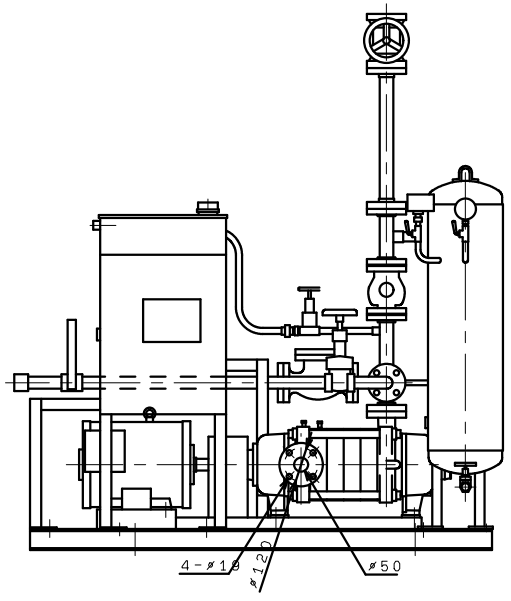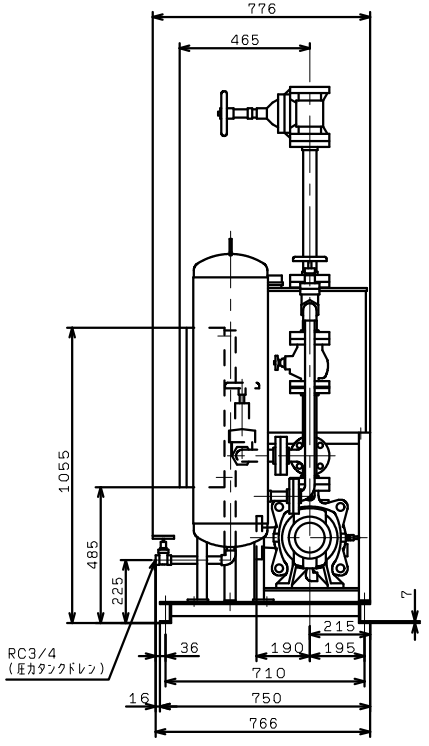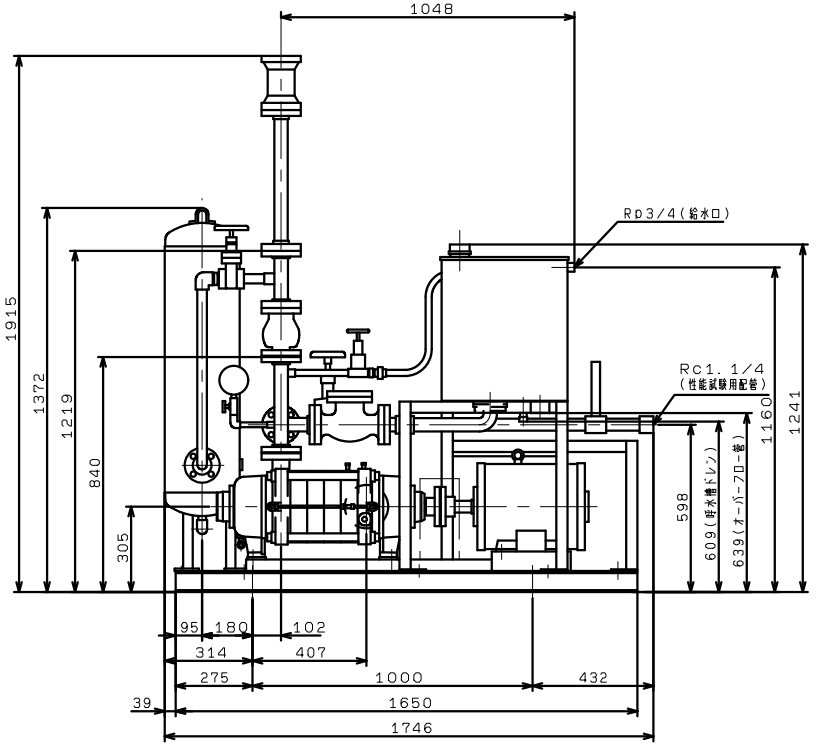
VC(83)