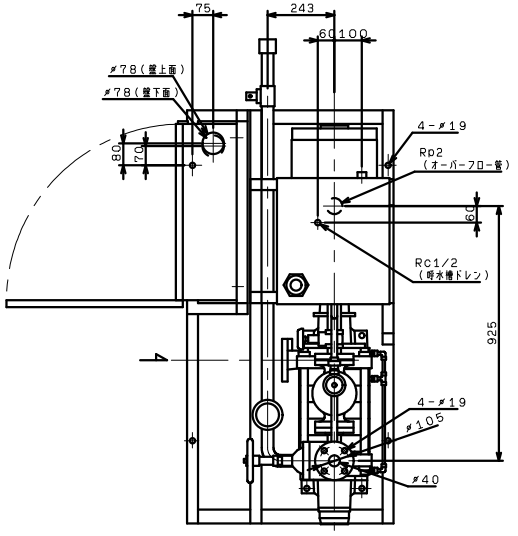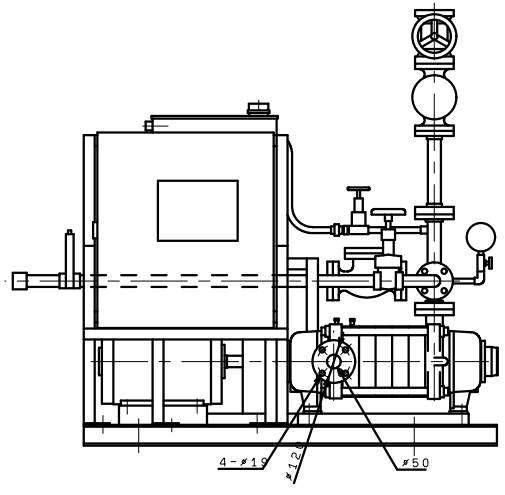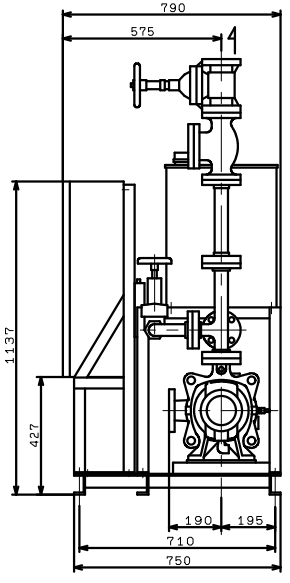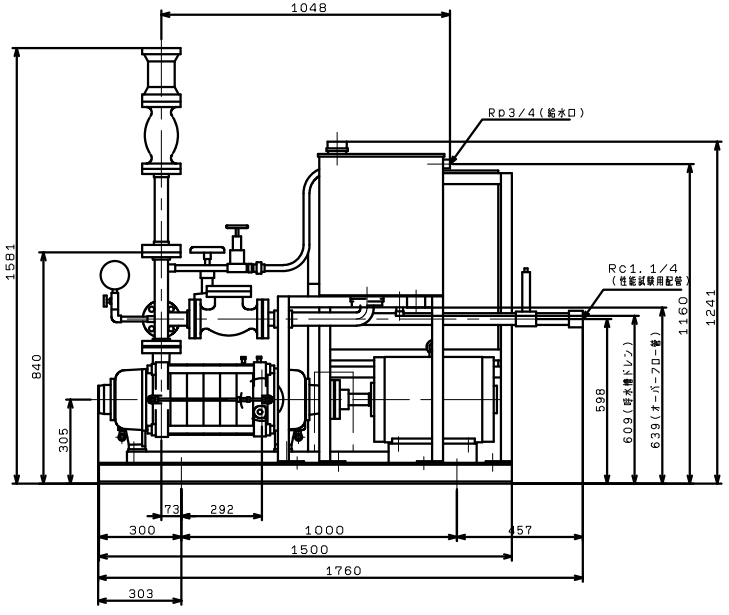KTK505A6ME18T
VC(41,42,43,44,45,74,75)