KTK505A6ME18T
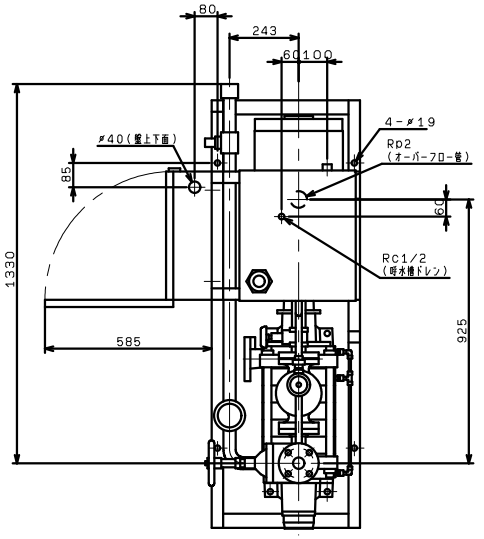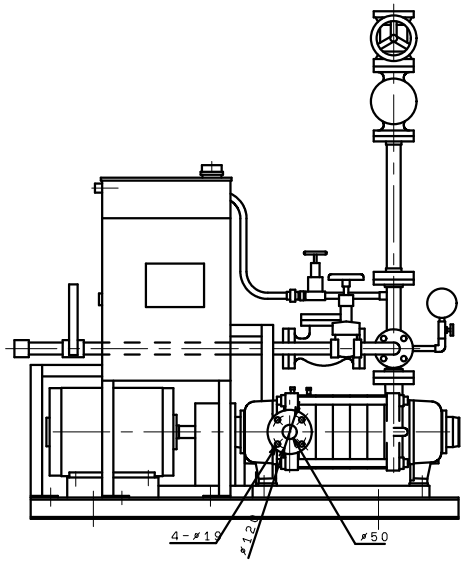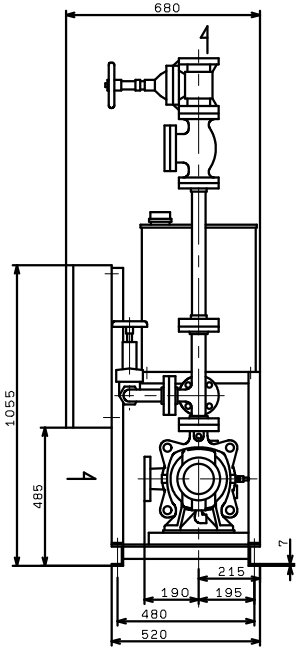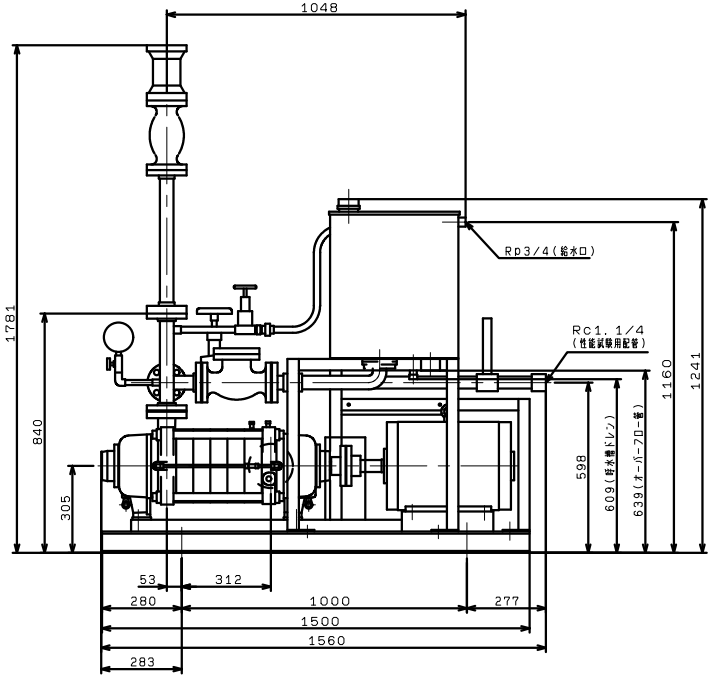
VC(83)