KTK505A6ME1BT
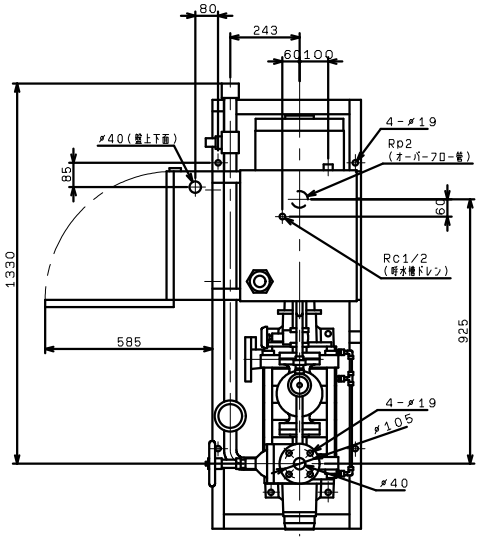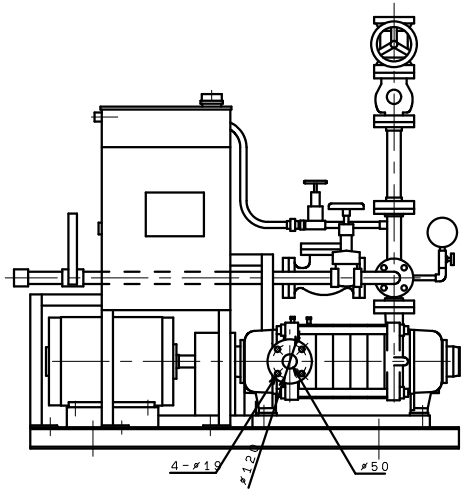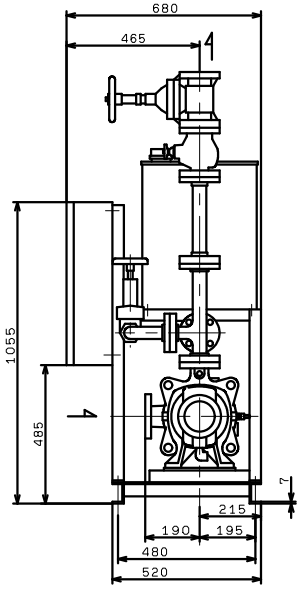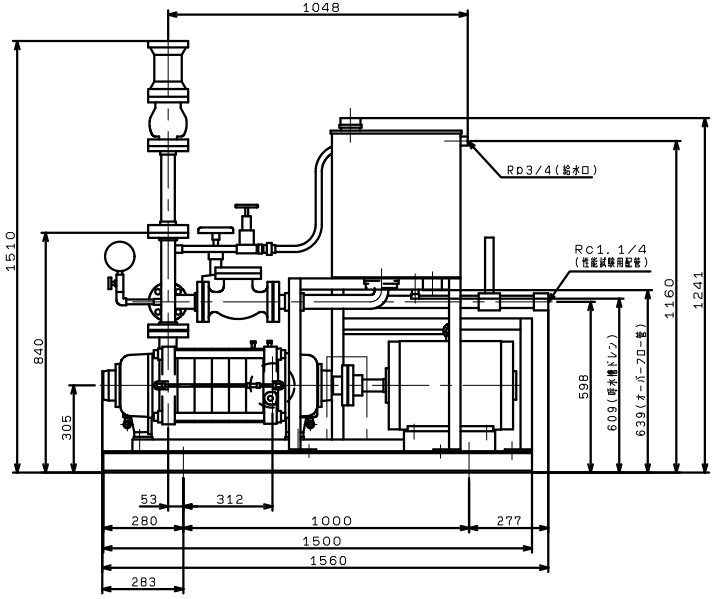
VC(90)