KTK505A6ME18TP
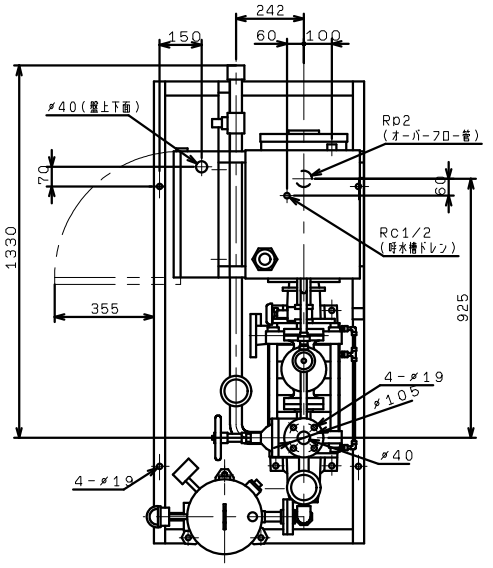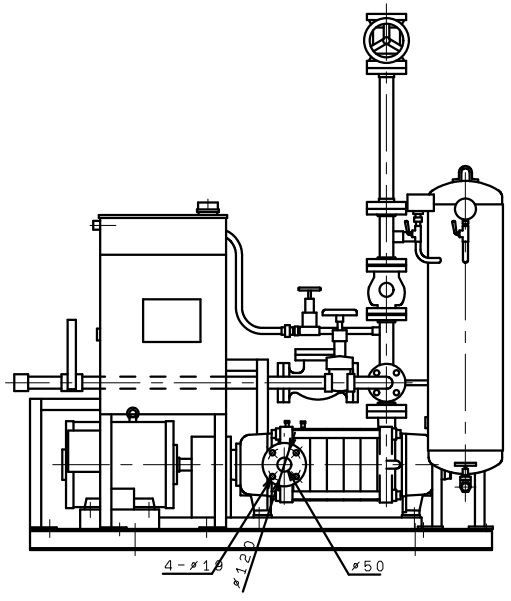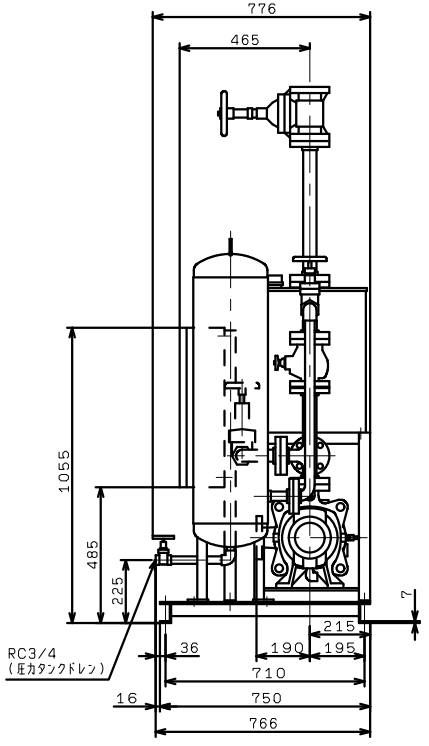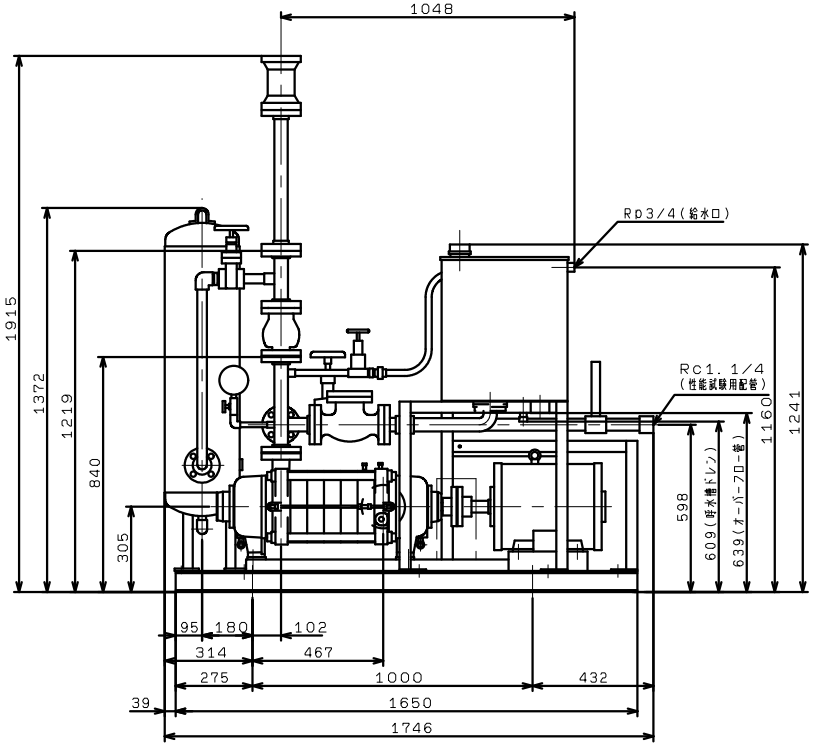
VC(83)