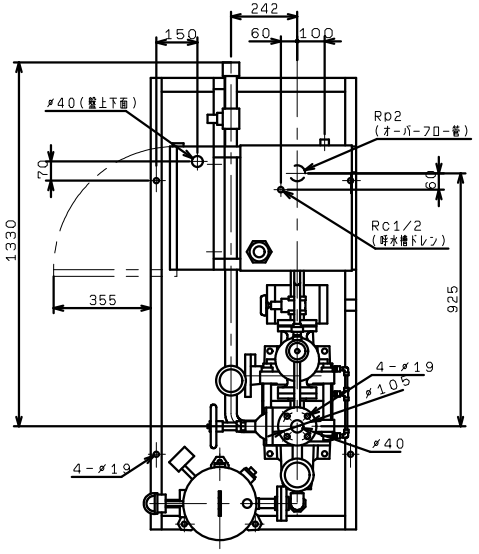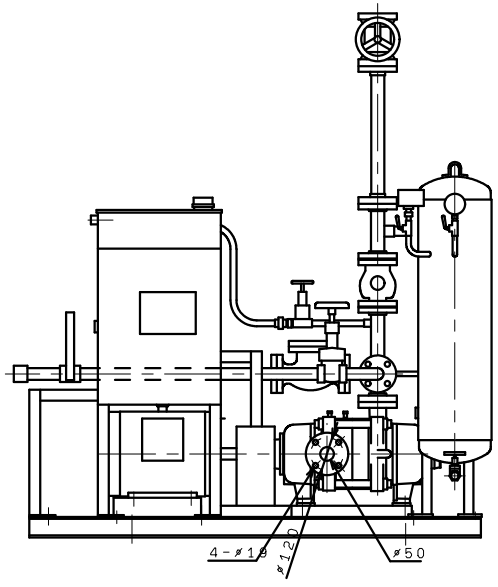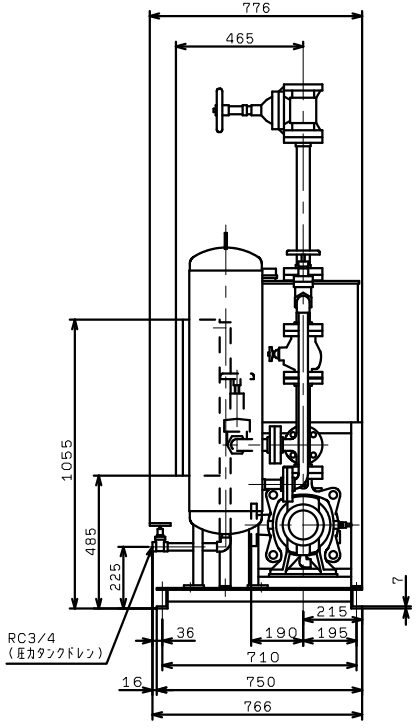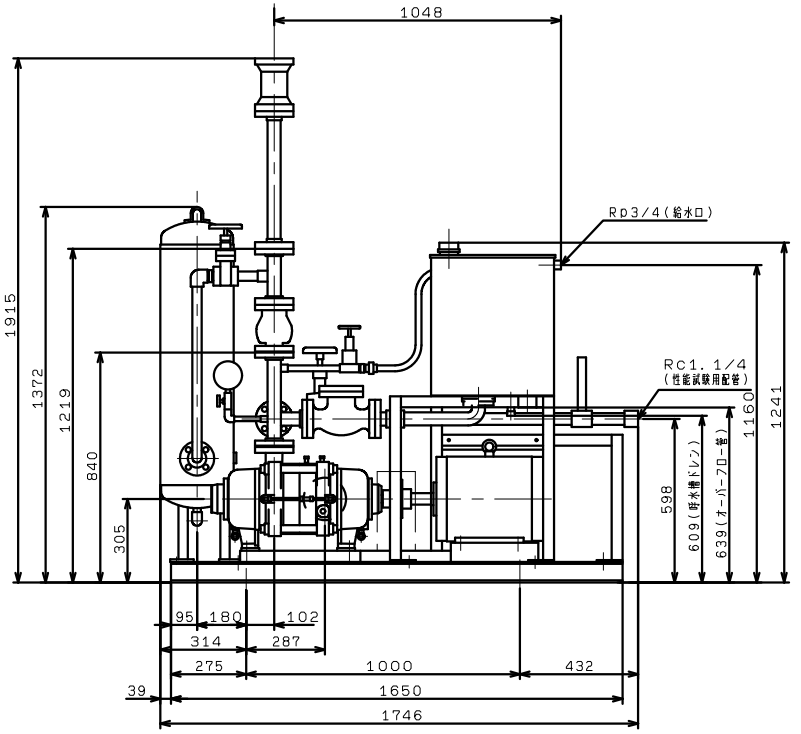KTK505A3ME11TP
KTK506A3ME11TP
KTK506A3ME15TP
VC(B3)