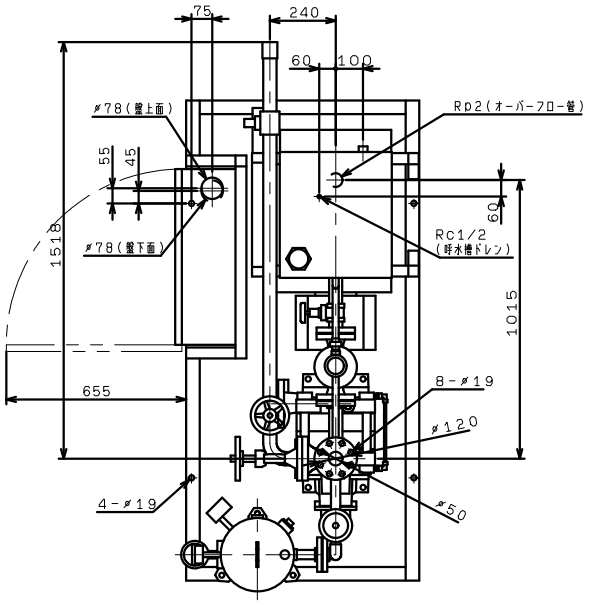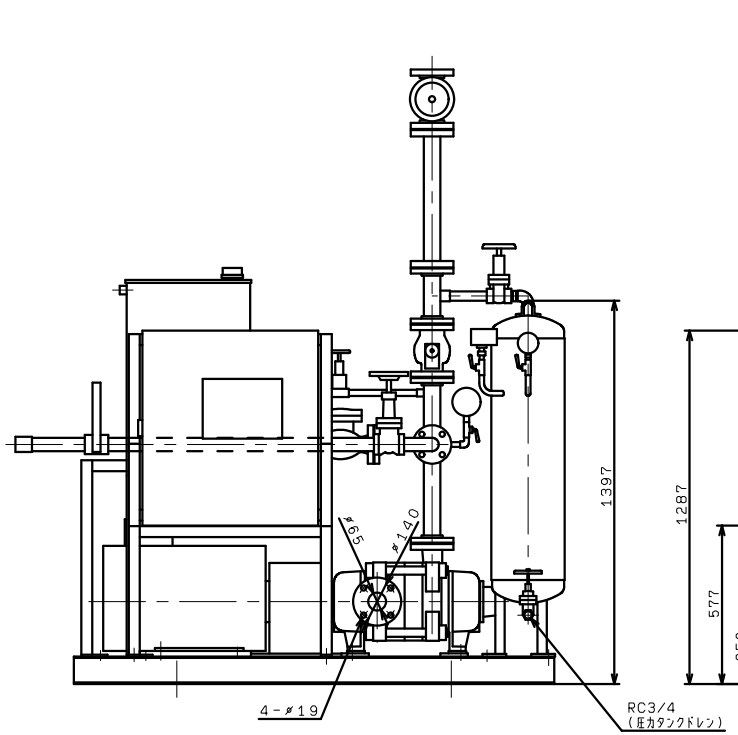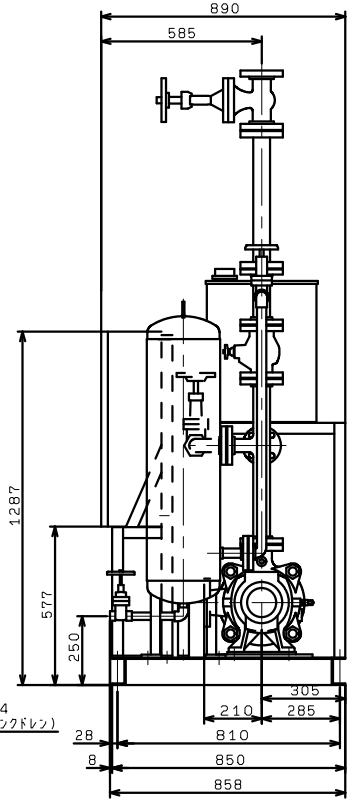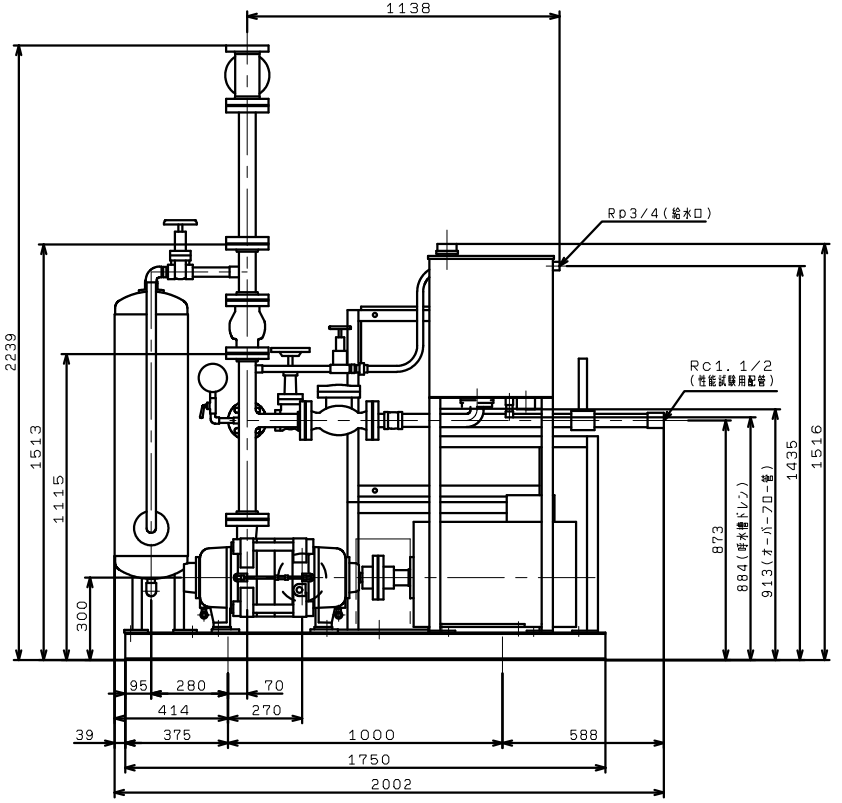KTK656A3ME30TP
VC(83)