KTK806A2ME22TP
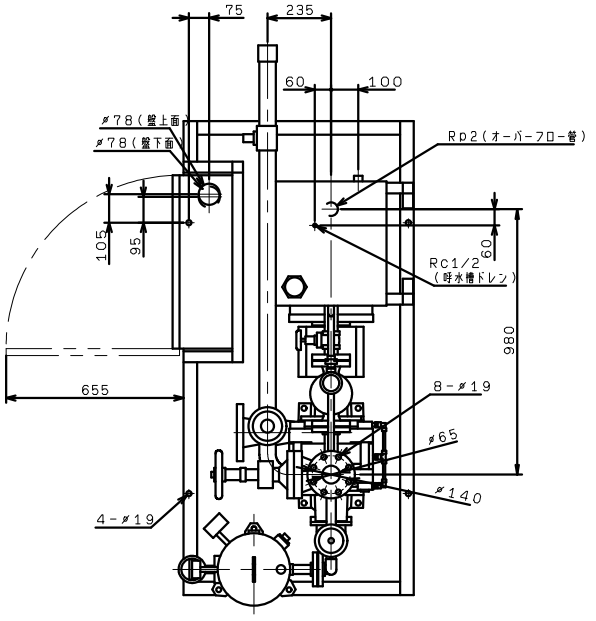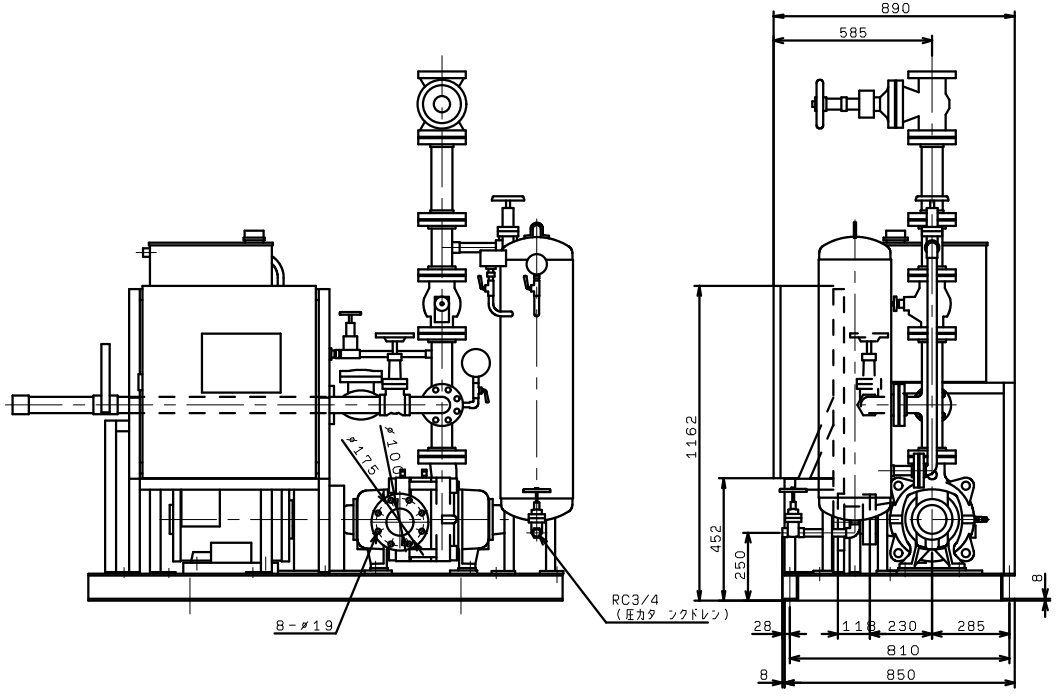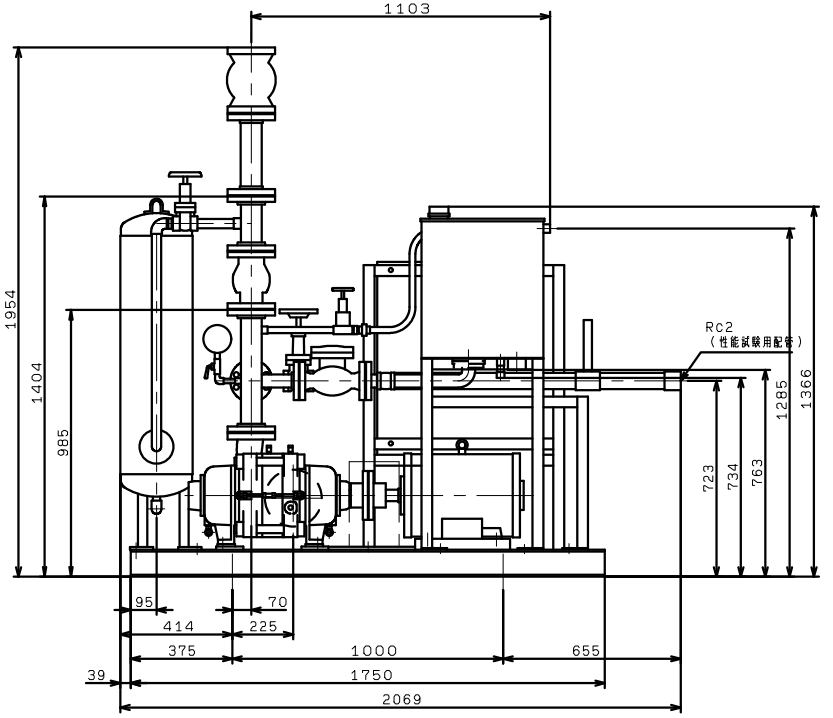
VC(41, 42, 43, 44, 45, 74, 75)