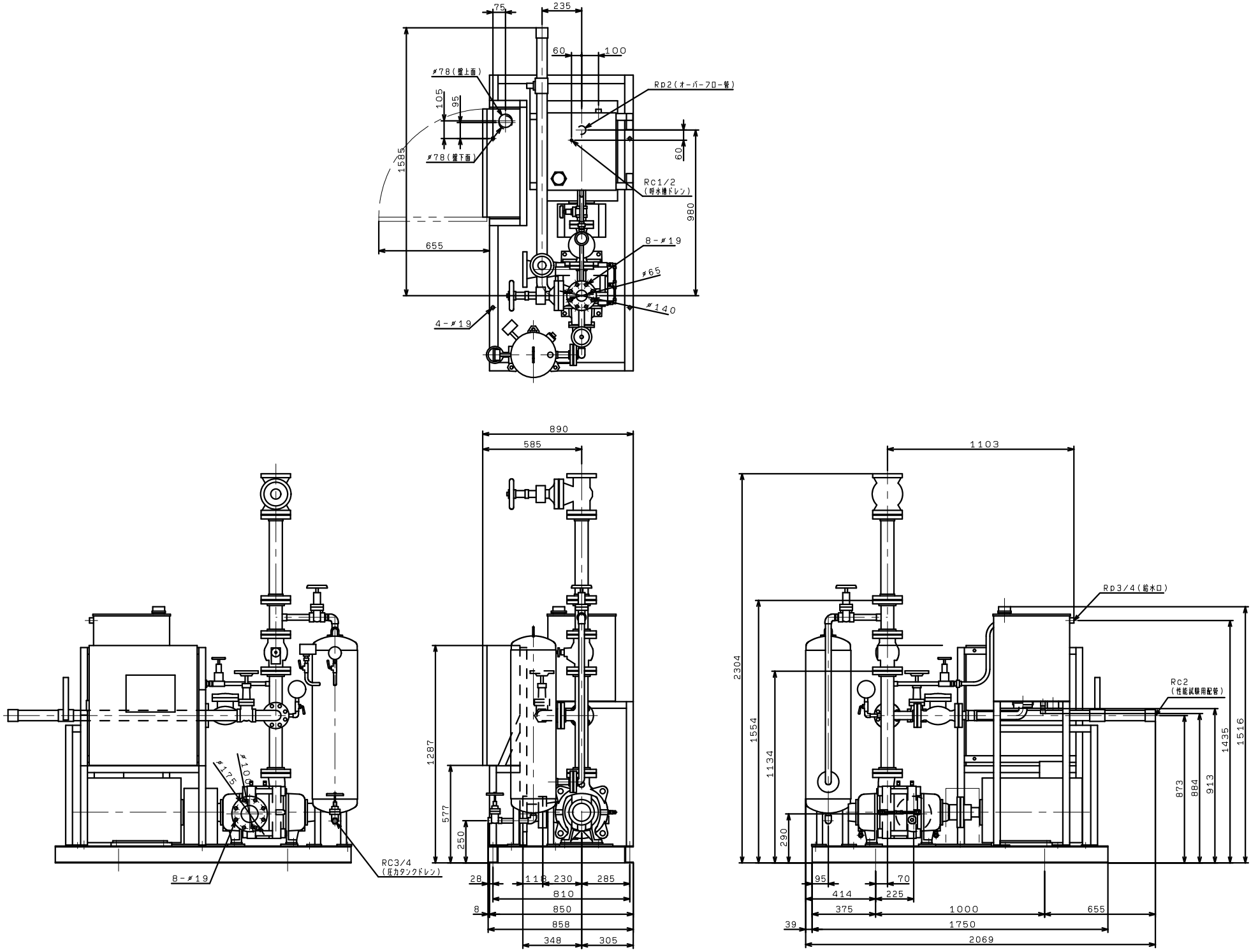KTK806A2ME30TP
VC(83)