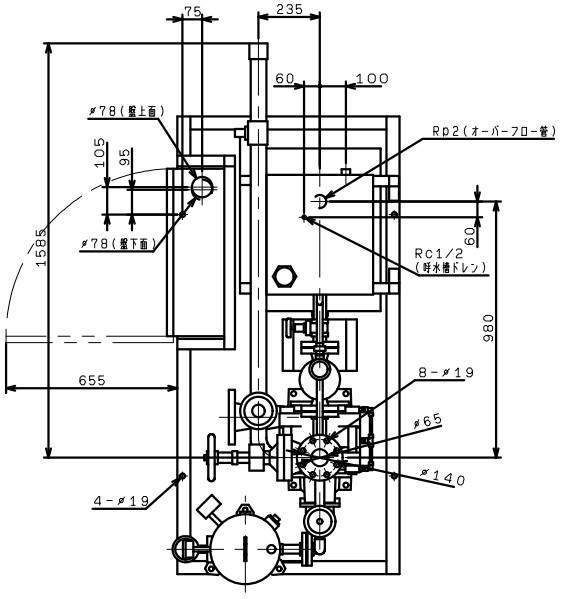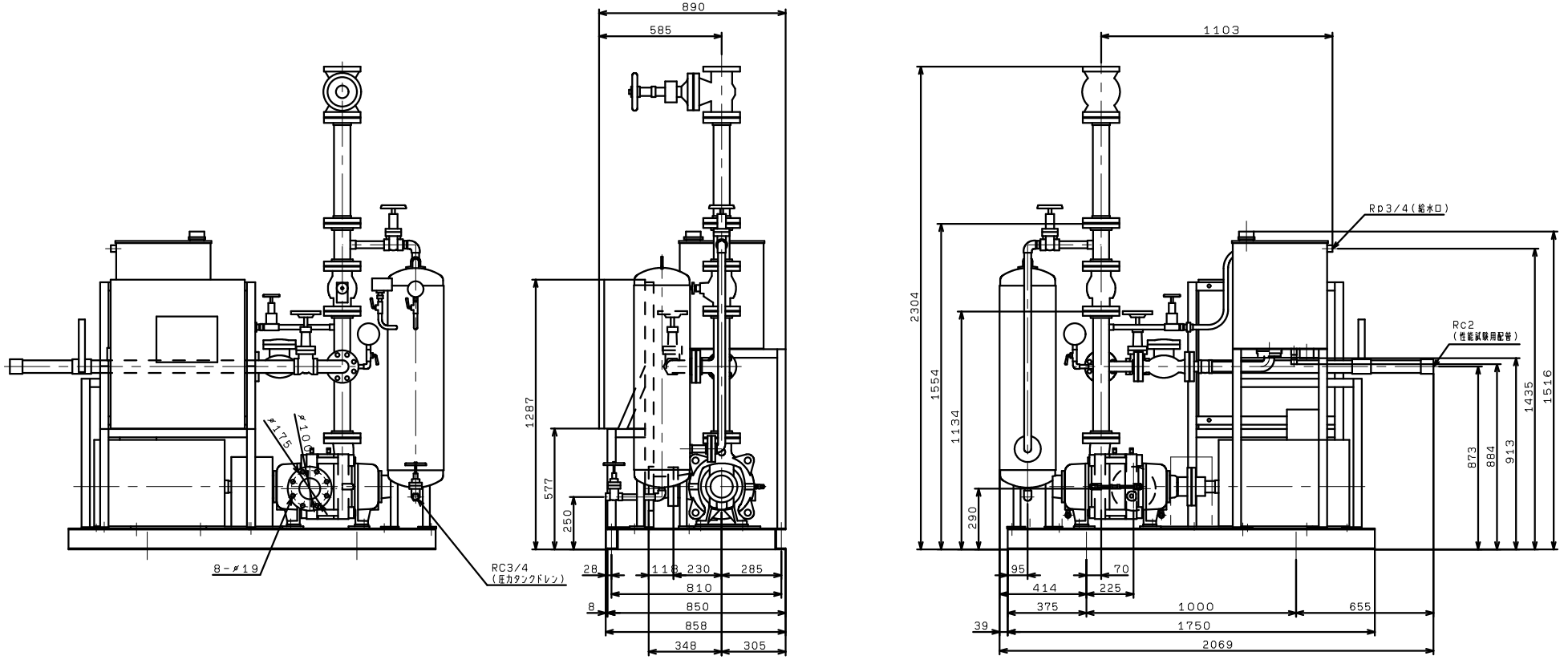KTK806A2ME37TP
KTK806A2ME45TP
VC(83)