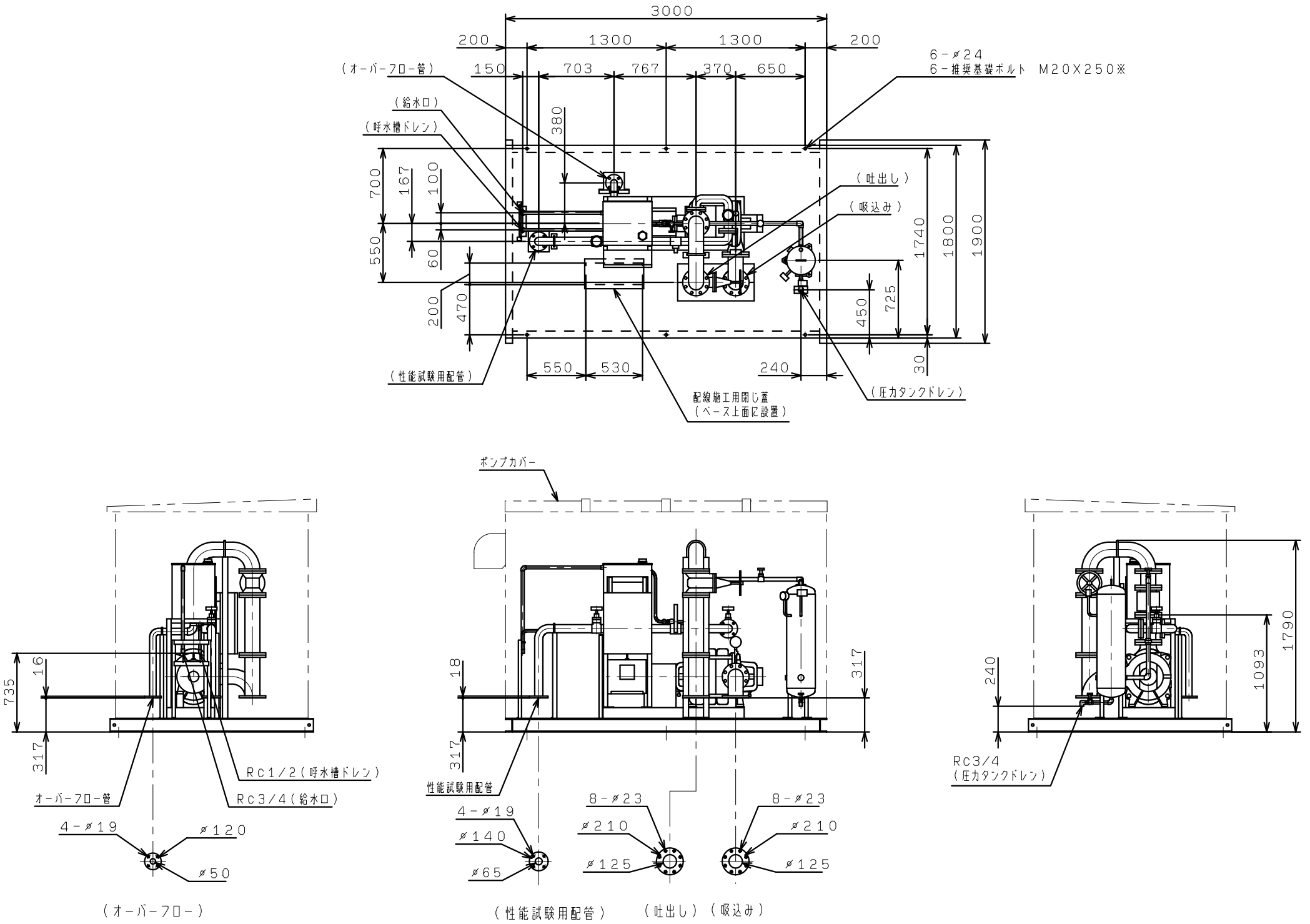KTY1255B3ME18TPW