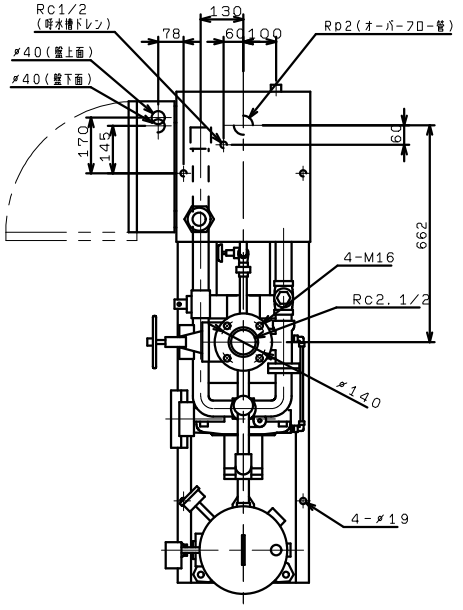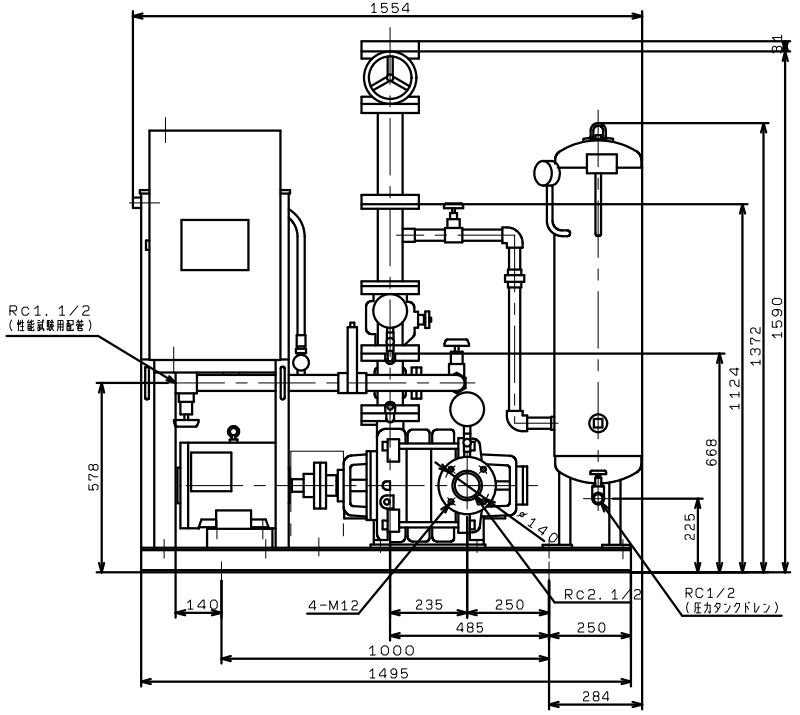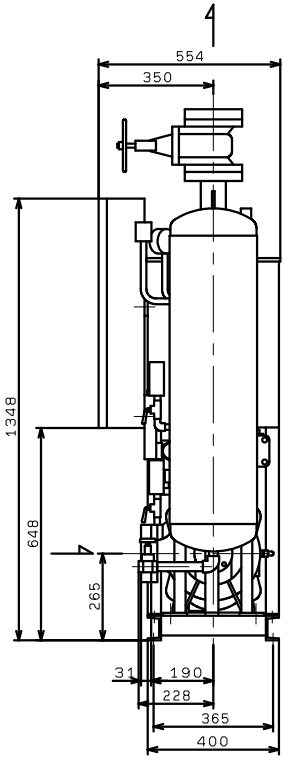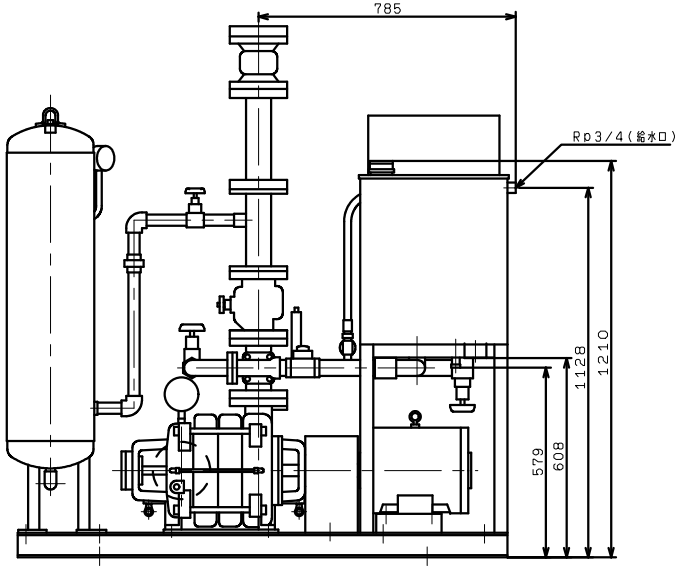KTY656A3ME7.5TP
VC41/42/44/45/74/75