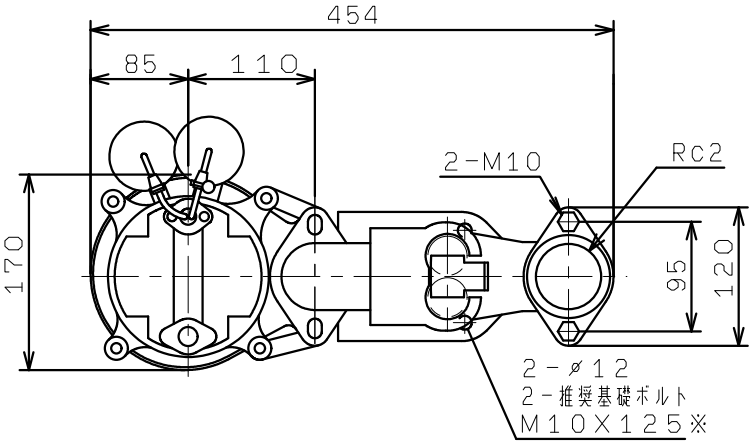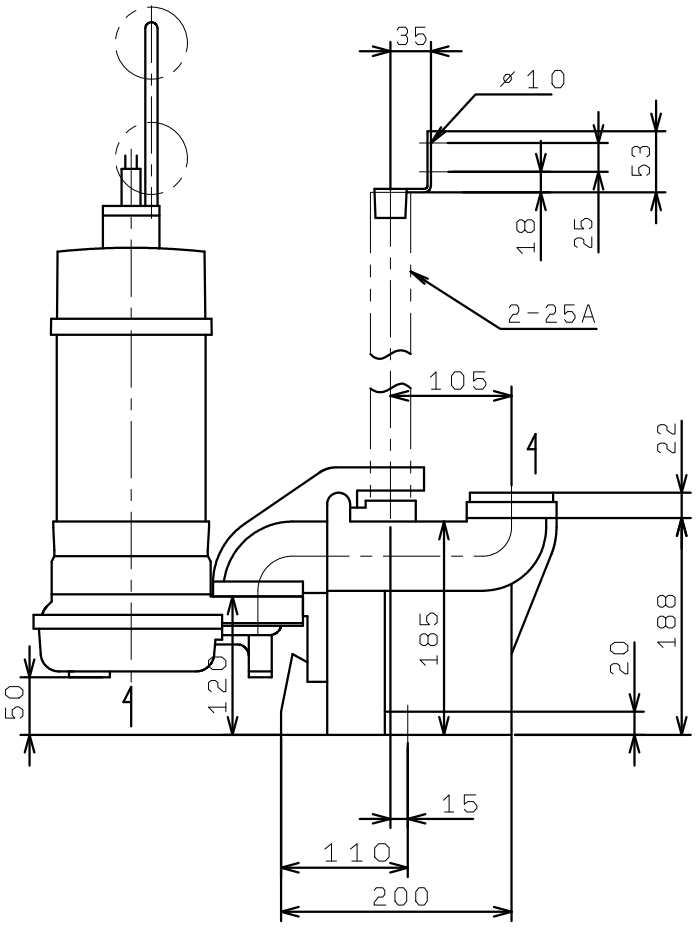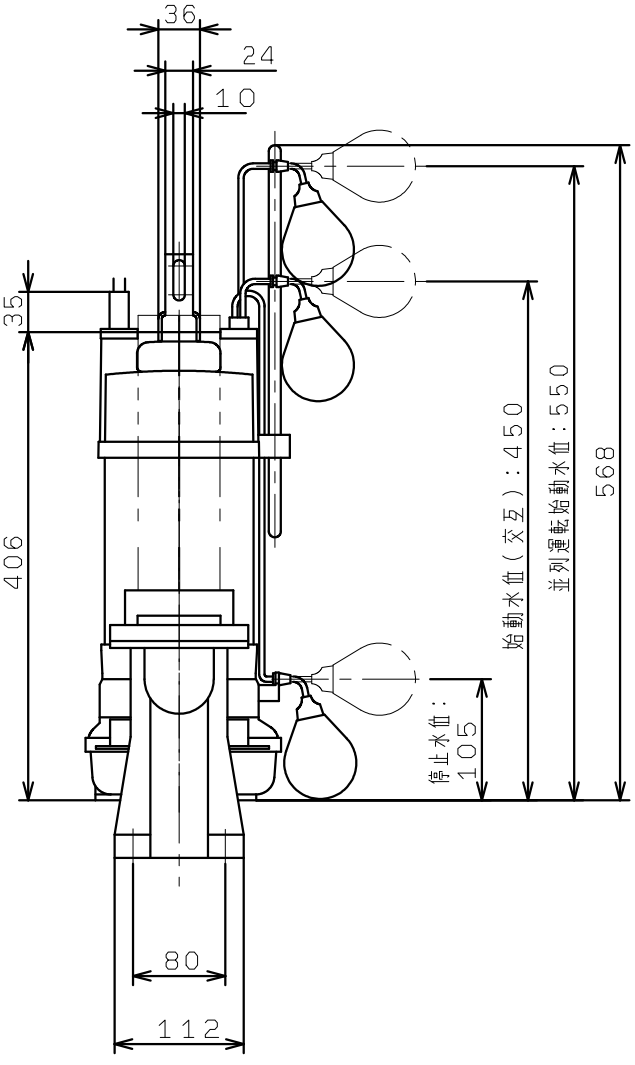WUZ4-505-0.4SLN
WUZ4-506-0.4SLN