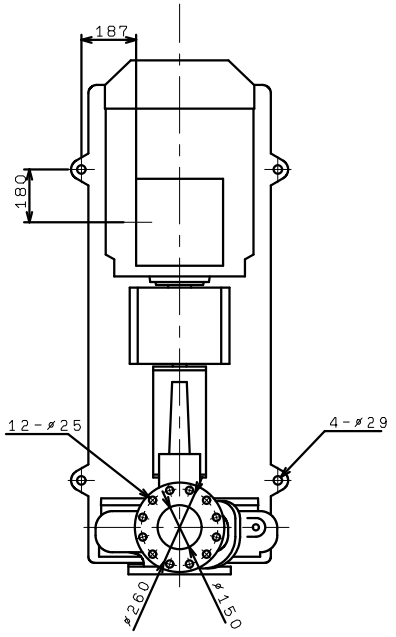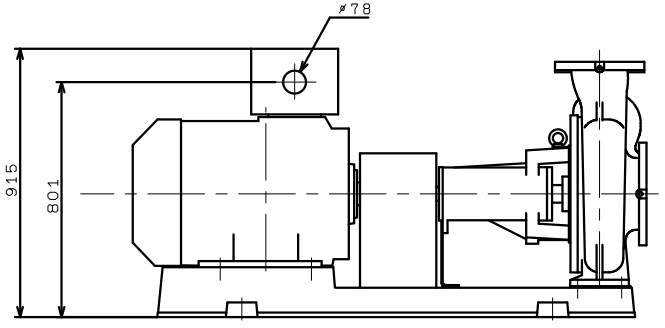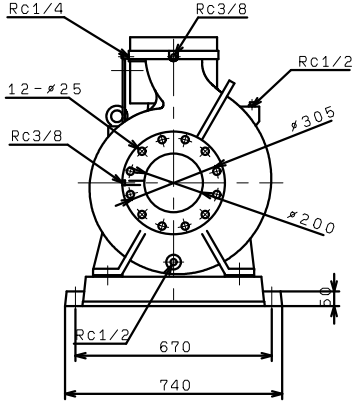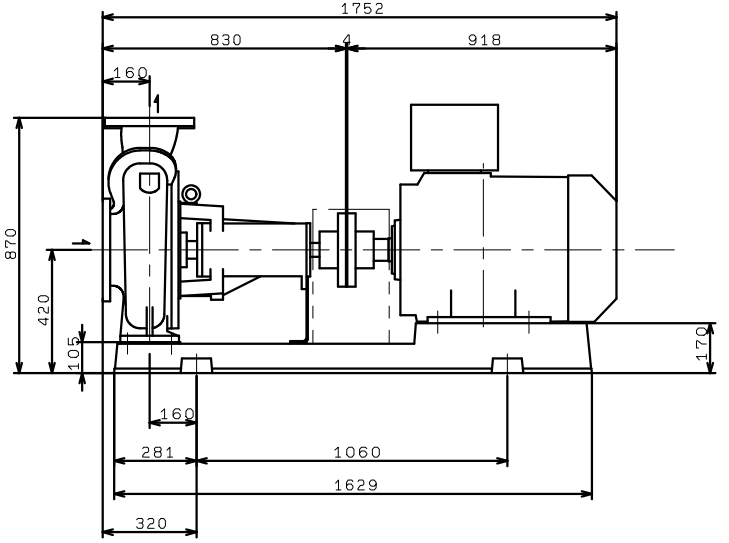GDF02005M4ME75