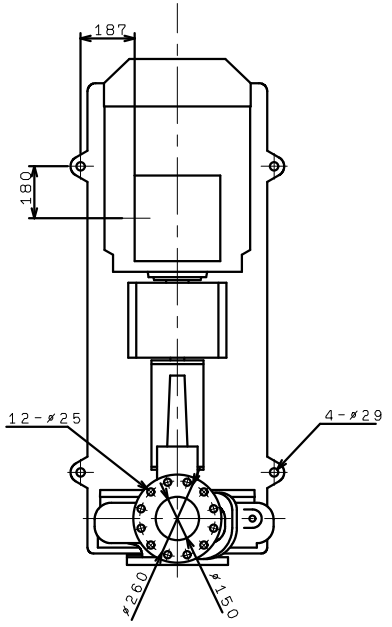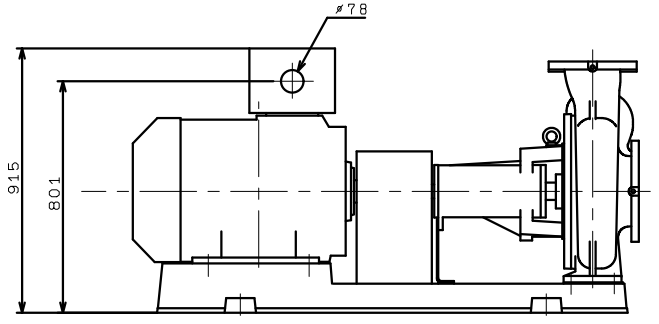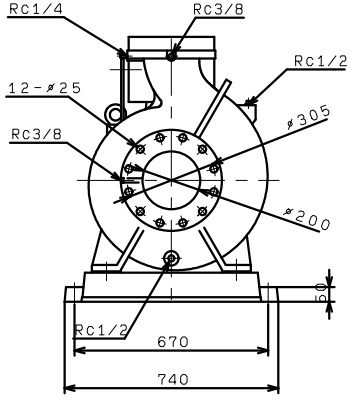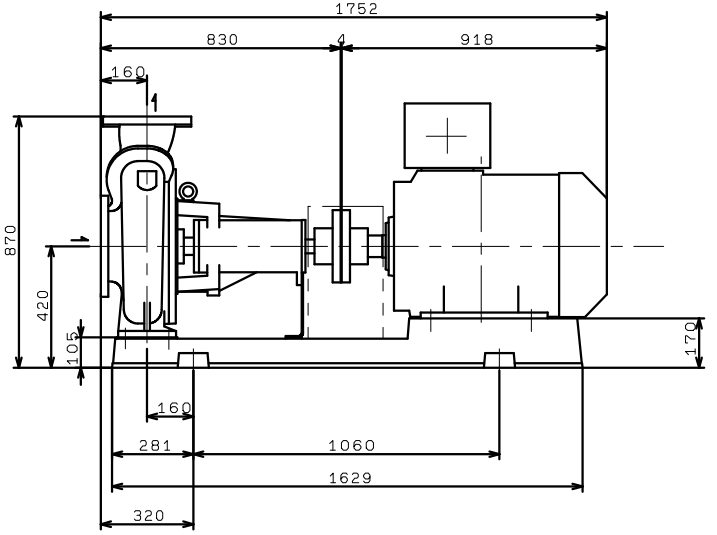GDF02005M4ME90
GDF02006M4ME90