K655MX5ME30 KR655MX5ME30
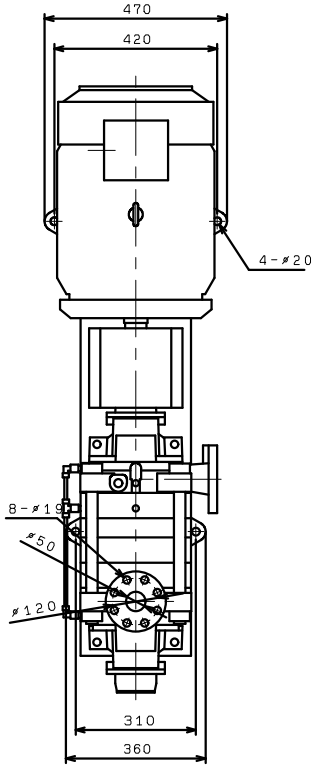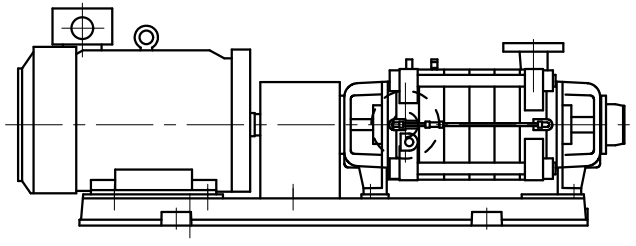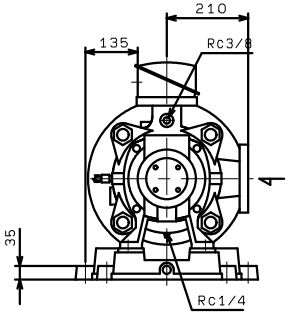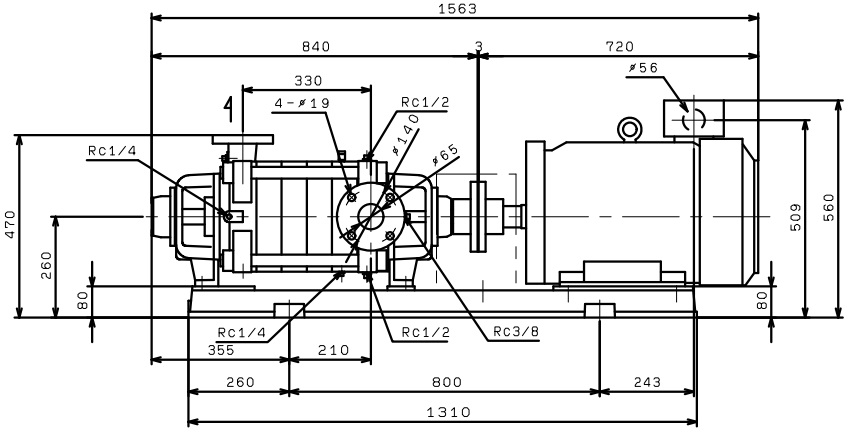
(VC91)