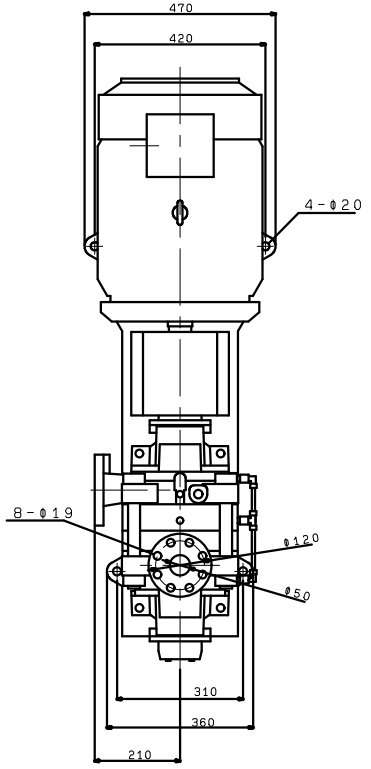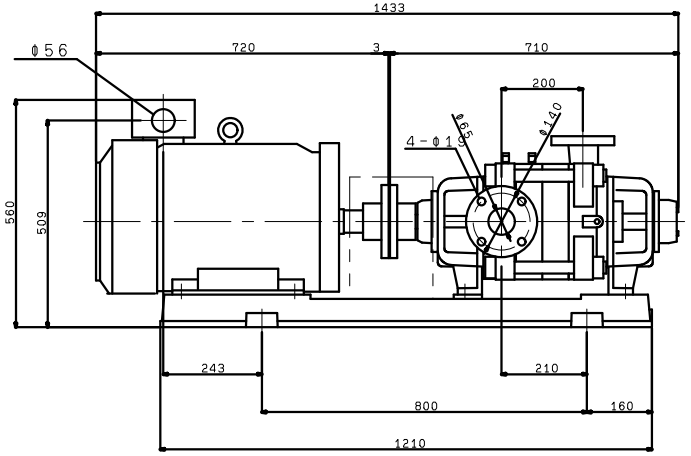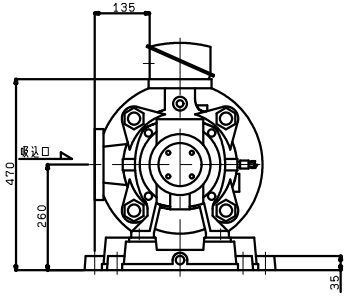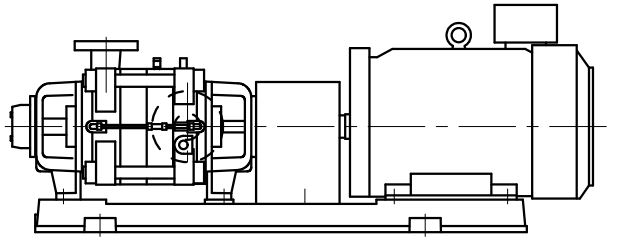K656GX3ME30 K656MX3ME30 KR656MX3ME30