KB2-325PE0.75
KB2-326PE0.75
(VC41,42,43,44,47)

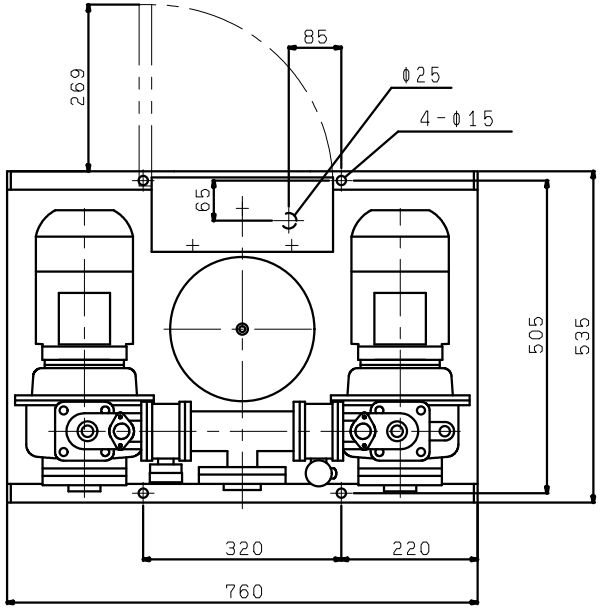

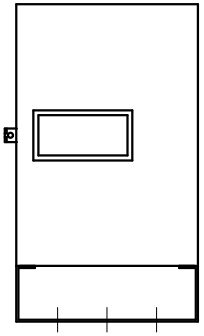
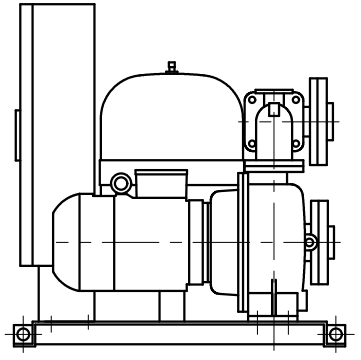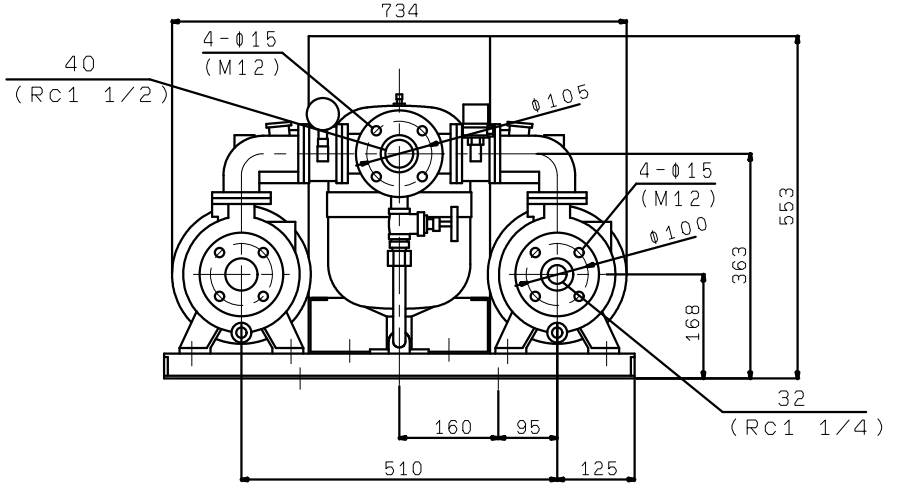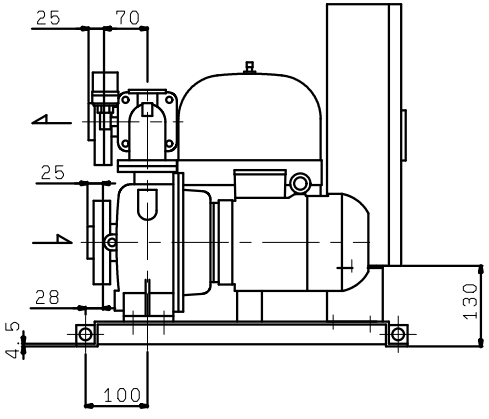
(図面正面側像)