KB2-405PE2.2
KB2-406PE2.2
(VC41,42,43,44,47)

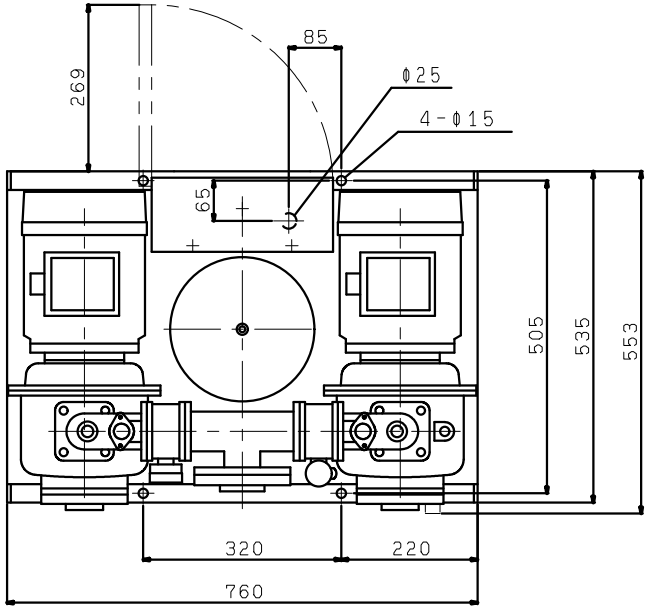

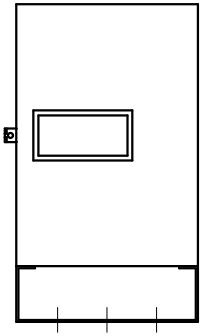
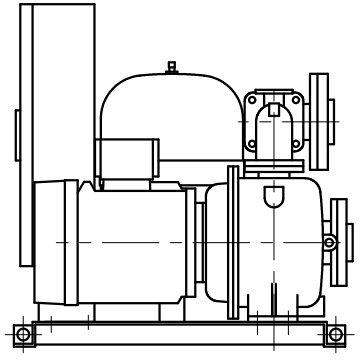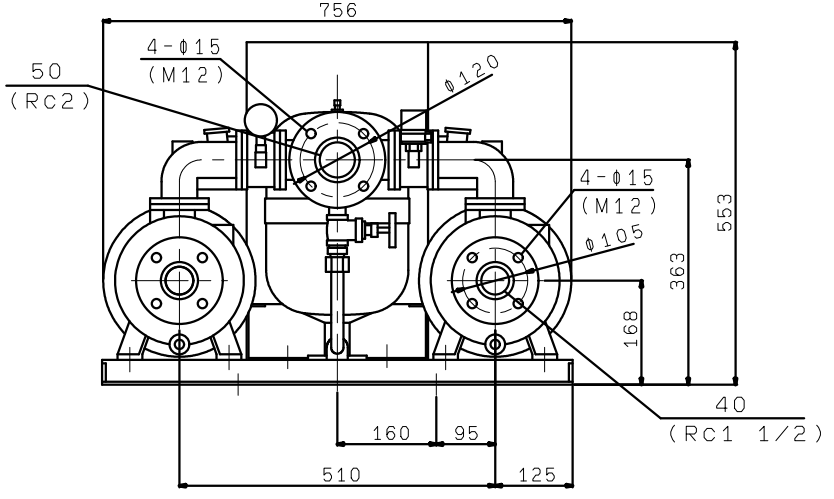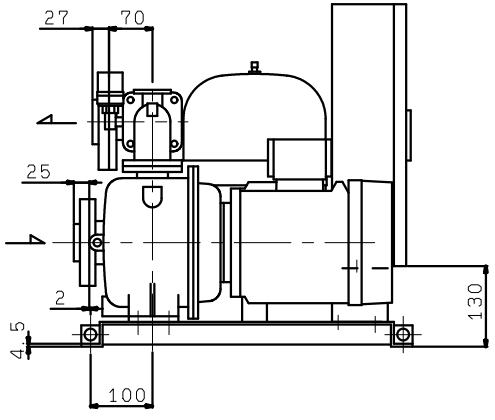
(図面正面側背)