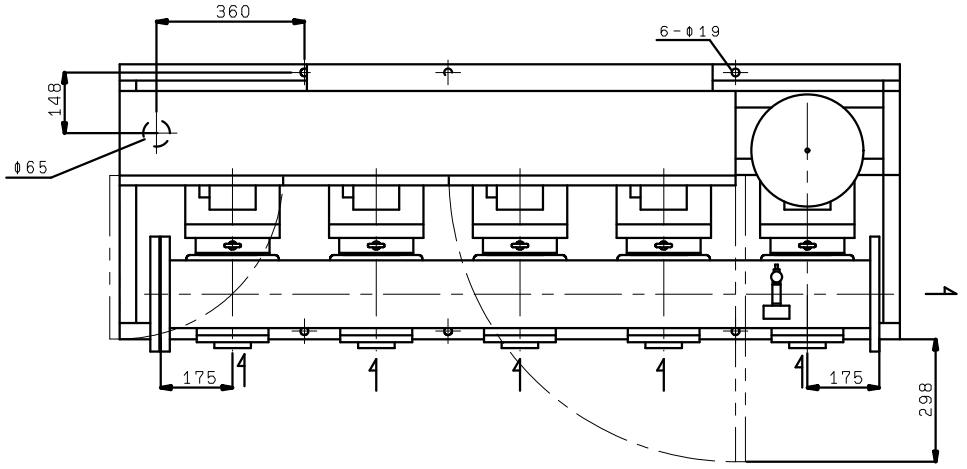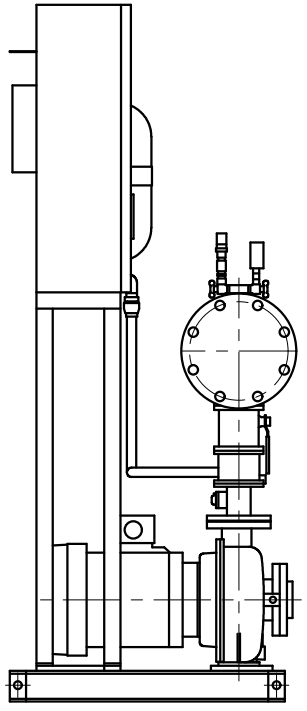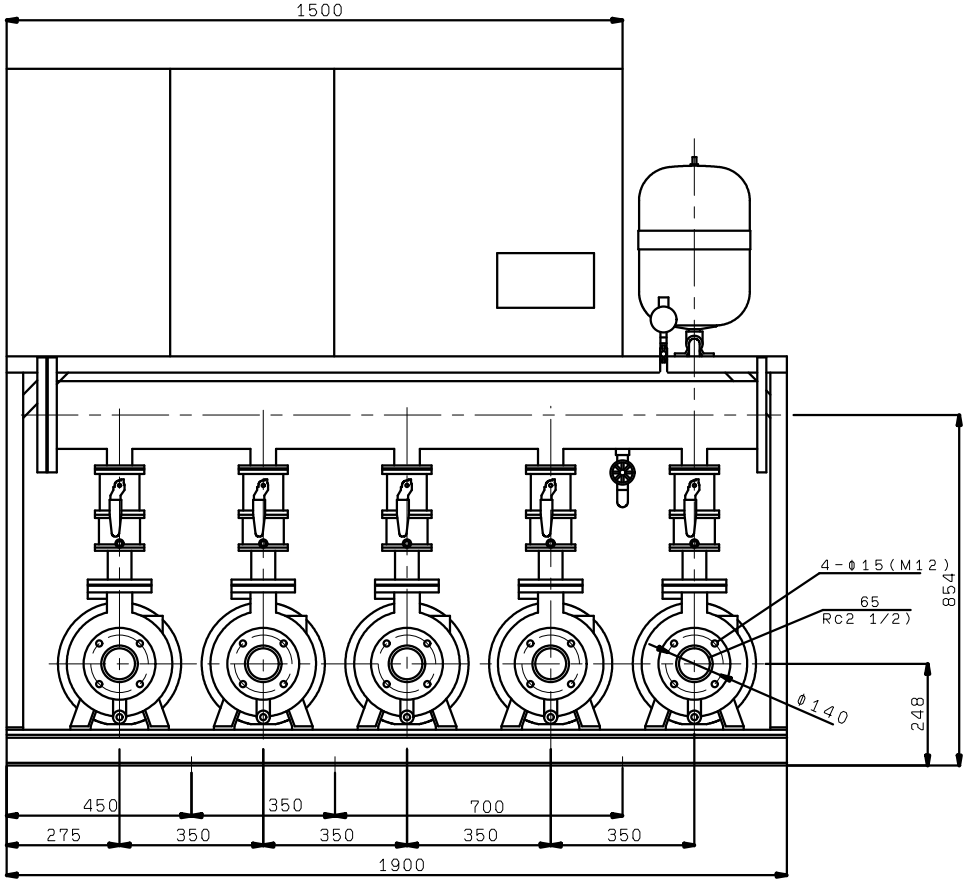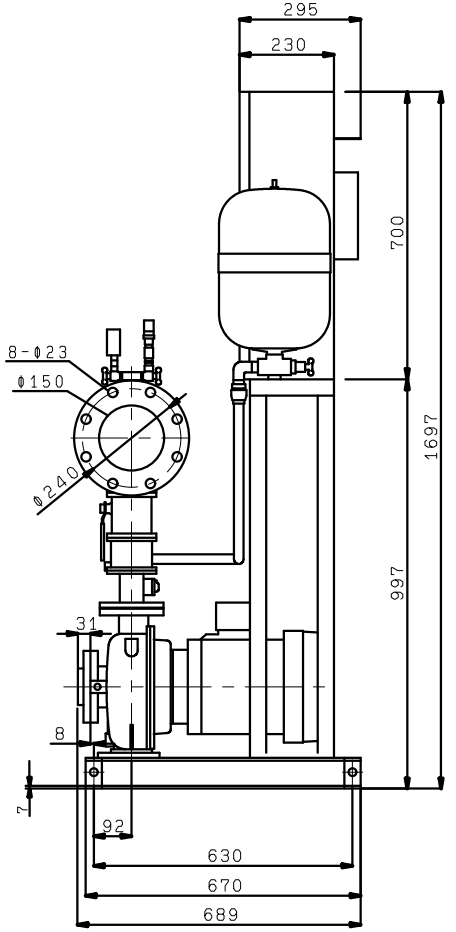KF2-65R5E7.5 VC92