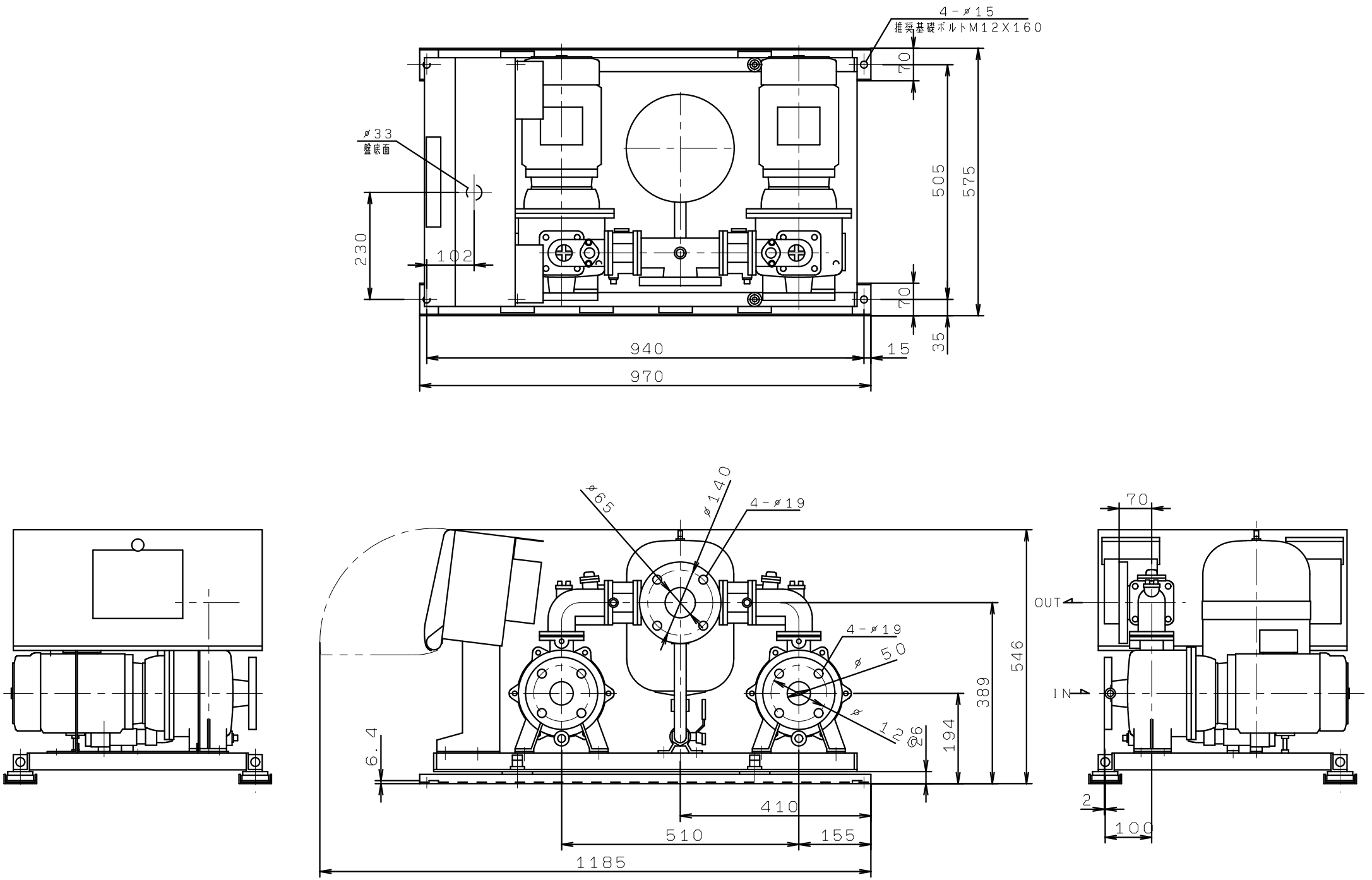KFE50P3.7
(VC81)