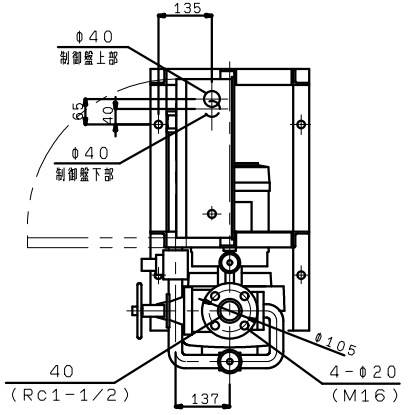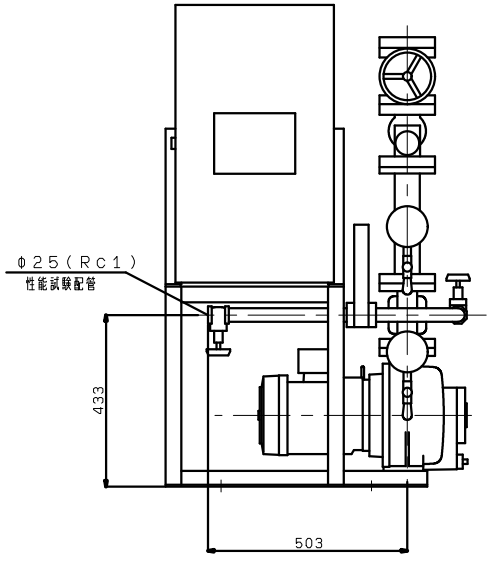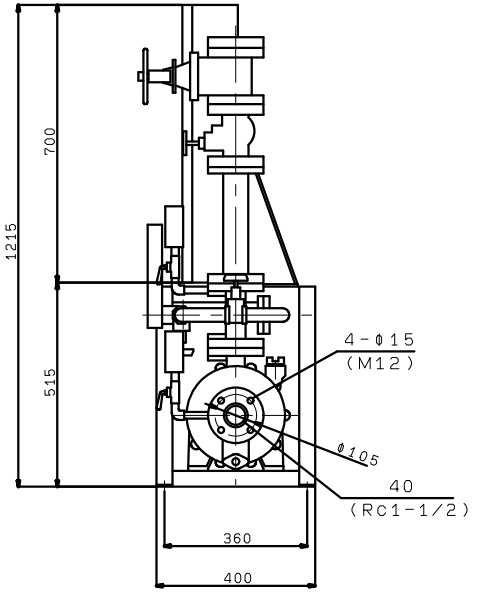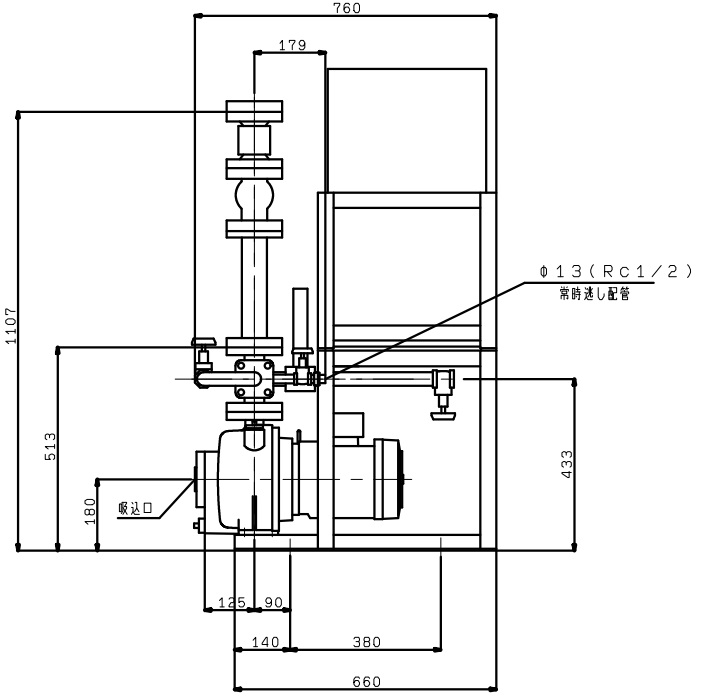KTK405C2.2F
KTK406C2.2F
VC(41,42,44,45)