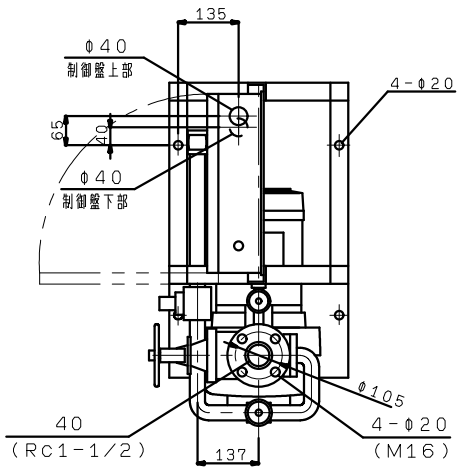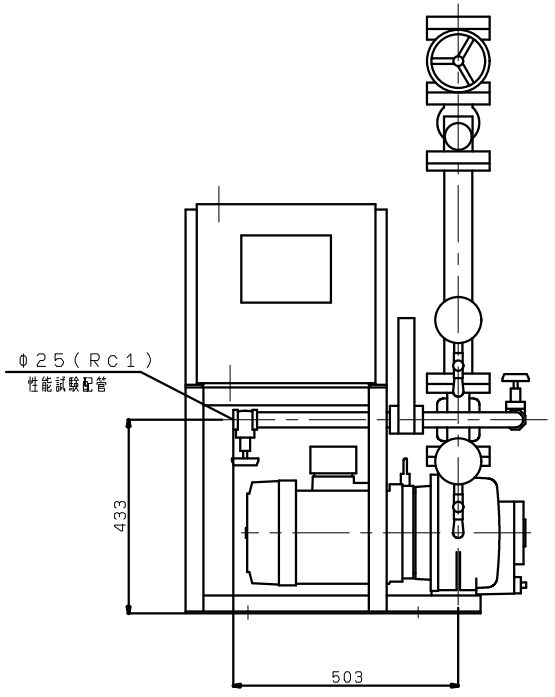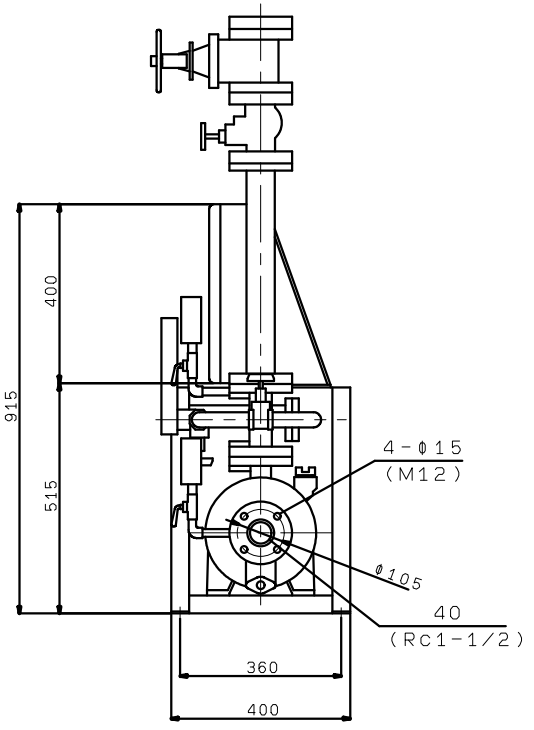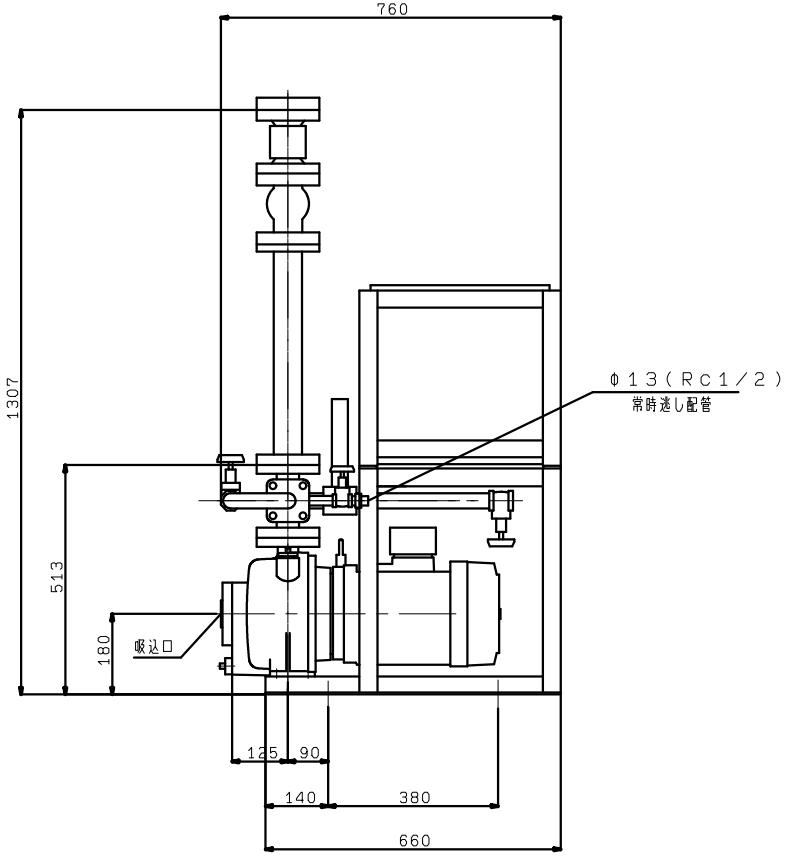KTK405C5.5F
KTK406C5.5F
VC(83)