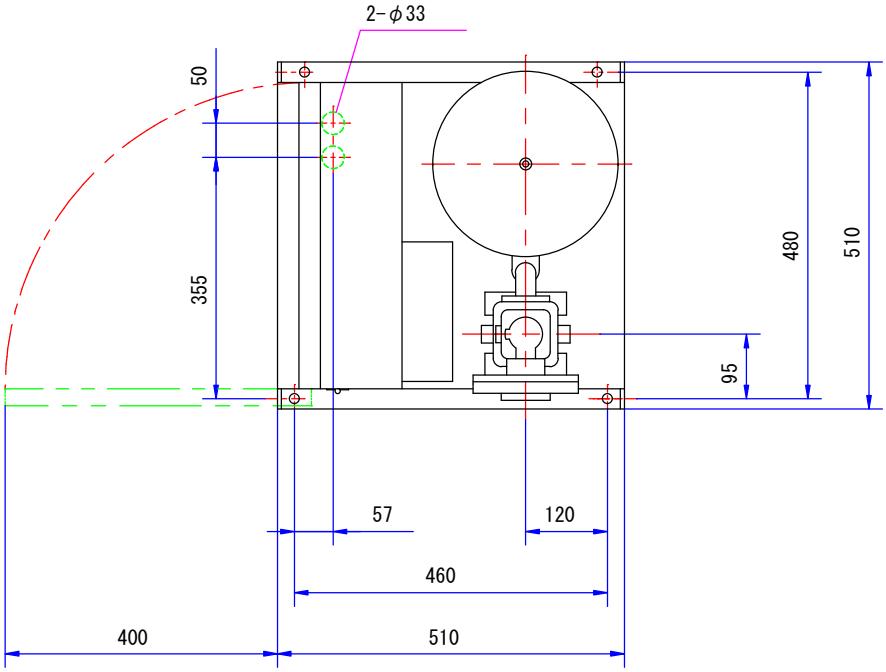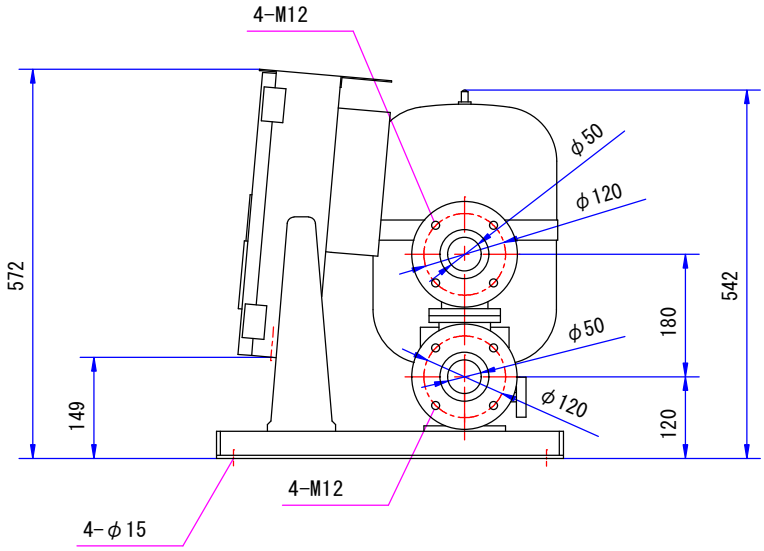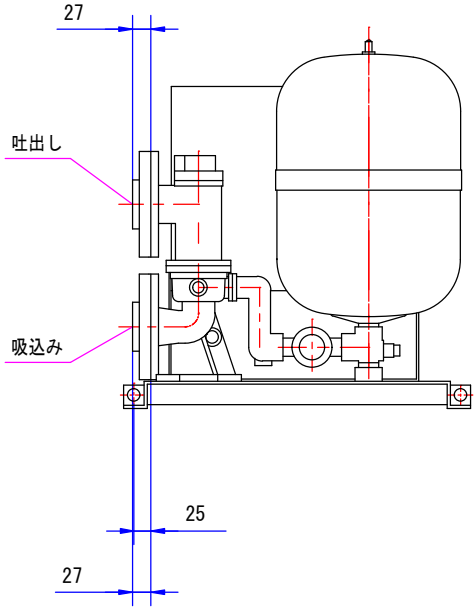LF-50S5.5
LF-50S7.5