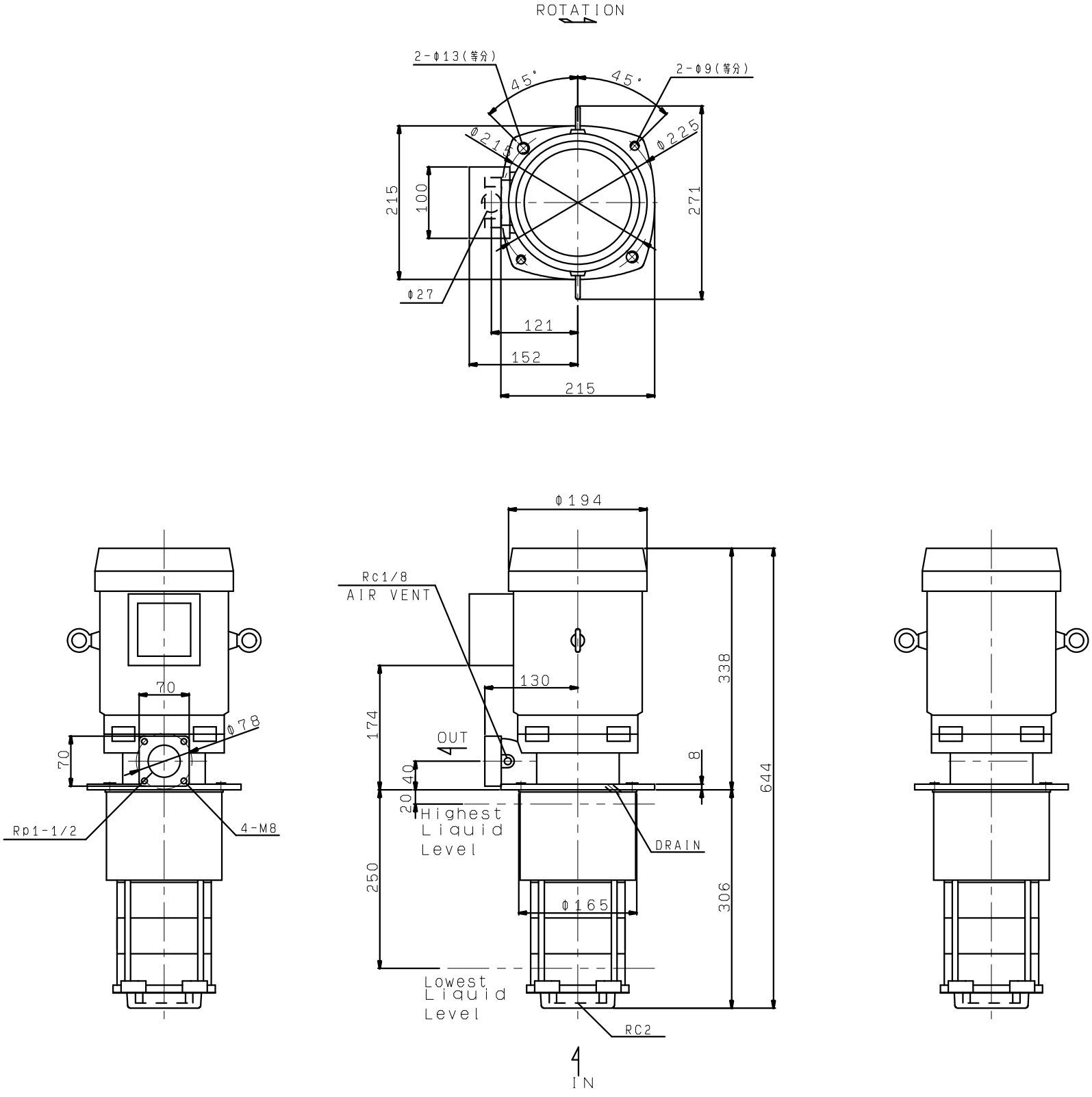RCD-40A3.0
RCD-40A3.0T4
VC80